NO	DESCRIPTION	Q'TY	FINISH	PART NUMBER	REMARK
1	CONNECTOR	1	GOLD	IPEX -1.37	
2	CABLE	0.2		1.37MM MICRO CABLE	
3	CONNECTOR	1	GOLD	SMA-05U3-TGG	
4	SHRINKING TUBE	0.02	BLACK	RU-0034	
5	ASSEMBLY	1		L-019330806	

Nounber	Length
019330806	130 mm
019330806-1	100mm
019330806-2	160 mm

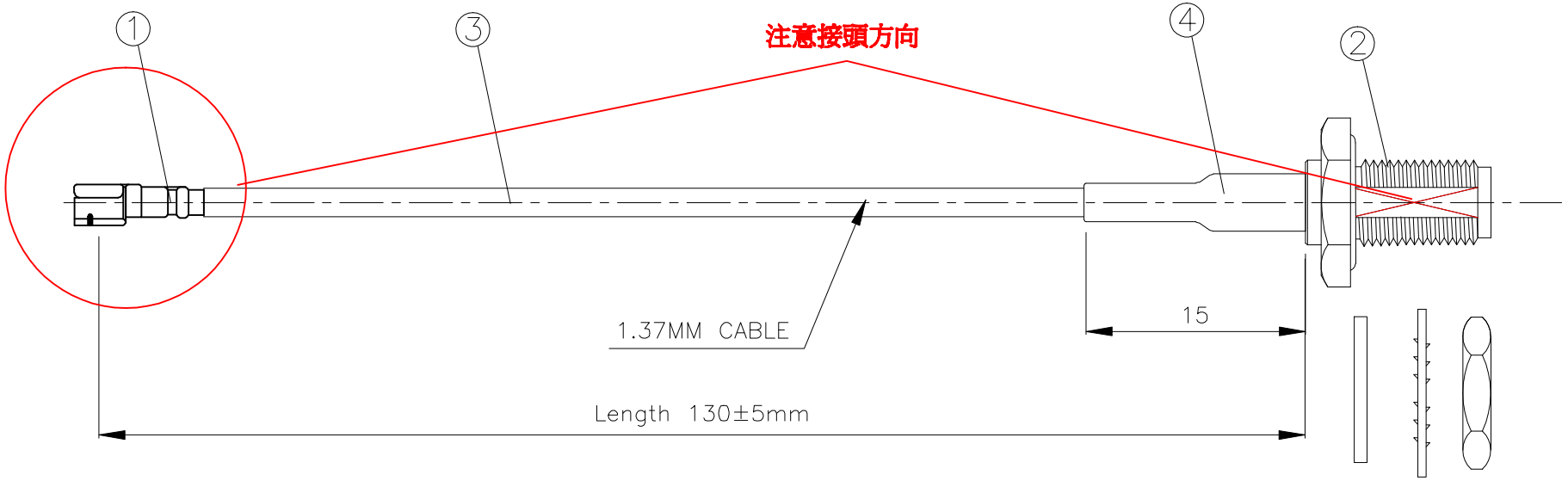

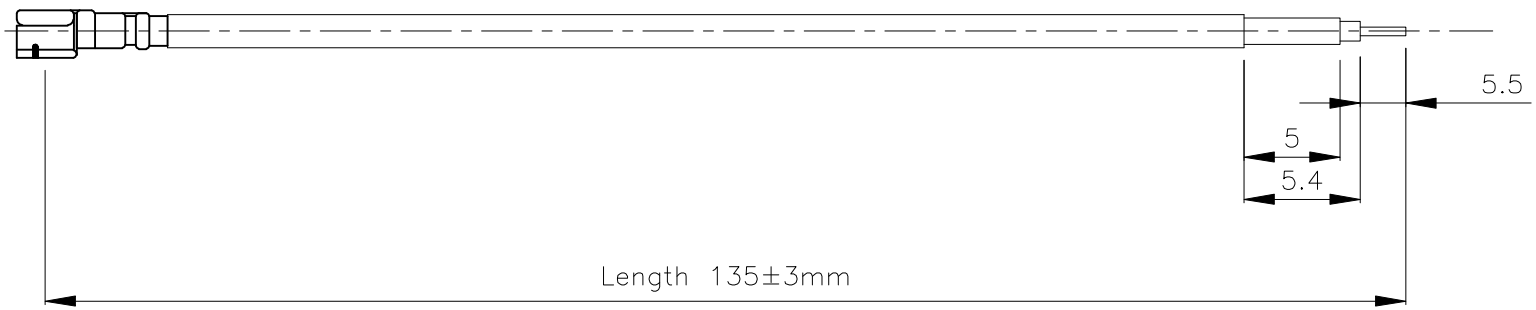

HUS-TSAN GROUP CO., LTD.
P.O.BOX 40-76.TAINAN.TAIWAN,R.O.C.

TITLE MHF I PLUG - SMA JACK 1.37MM CABLE

PART NO. 019330806

DRAWING NO. 019330806

DRAWN	蘇志欣	DATE	100.11.17
CHECKED	林孟翰	DATE	102.09.18
Q.A.	黃珏雯	DATE	
APPROVAL	徐燦霖	DATE	
REVISION		DATE	

DIMENSIONS ARE IN MILLMETERS

UNLESS OTHERWISE SPECIFIED TOLERANCE

0.5-5=±0.2	120-315=±1
5-30= ±0.4	315-1000=±1.6
30-120=±0.6	1000-2000=±2.4

SCALE 4:1 SIZE A

REVISION	
DESCRIPTION	ENGINEER