NO	DESCRIPTION	MATERIAL	Q'TY	FINISH
1	SHELL	BRASS	1	NICKEL
2	BODY 1	BRASS	1	NICKEL
3	GASKET	SI RUBBER	1	RUBBER
4	WASHER	BRASS	1	NICKEL
5	SPRING	SK-5	1	NICKEL
6	WASHER	BRASS	1	NICKEL
7	INSULATION	DELRIN	1	DELRIN
8	PIN	BRASS	1	GOLD
9	BODY 2	BRASS	1	NICKEL
10	WASHER	BRASS	1	NICKEL
11	INSULATION	TEFLON	1	TEFLON
12	RING	BRASS	1	NICKEL

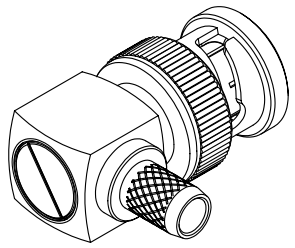

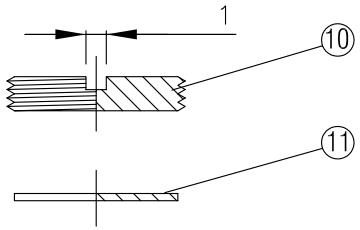

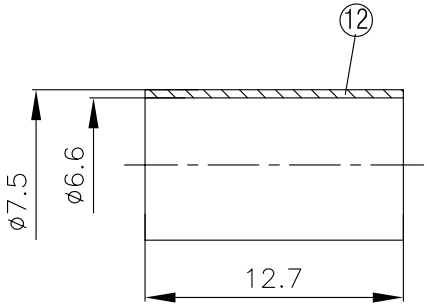

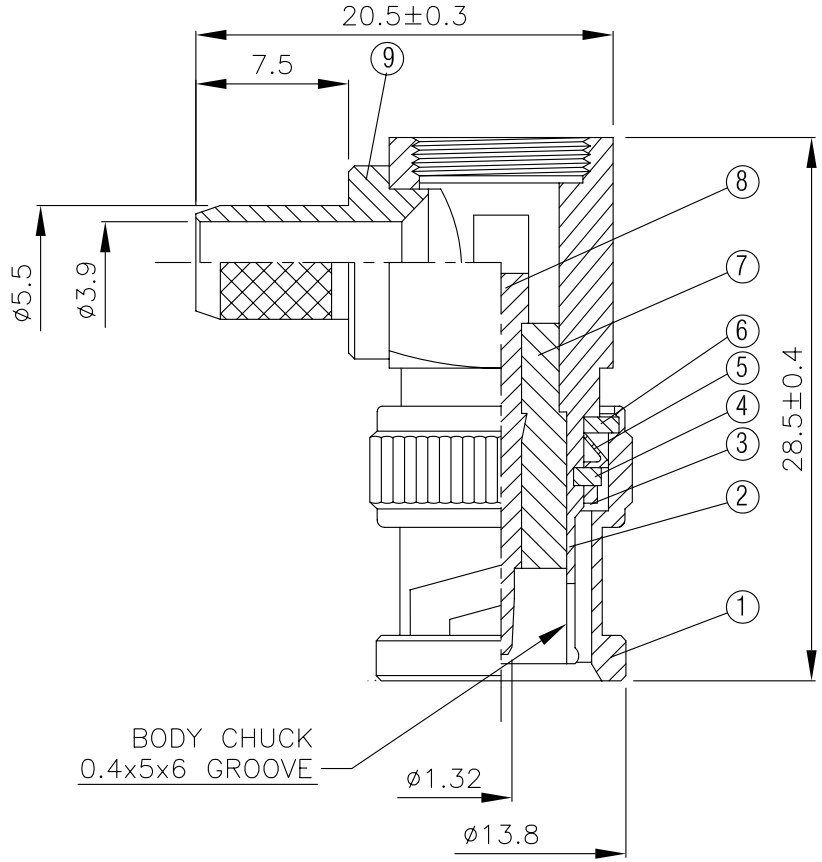

HUS-TSAN GROUP CO., LTD.	DRAWN MARY	DATE 96.06.29	DIMENSIONS ARE IN MILLMETERS	REVISION	
P.O.BOX 40-76.TAINAN.TAIWAN,R.O.C.	CHECKED 蘇志欣	DATE	UNLESS OTHERWISE SPECIFIED TOLERANCE	DESCRIPTION	ENGINEER
TITLE BNC MALE ANGLE CRIMP FOR RG-59/U	Q.A. 蘇姿潔	DATE	0.5-5=±0.2 120-315=±1		
PART NO. BNC-02GV1-DGN	APPROVAL 徐燦霖	DATE	5-30=±0.4 315-1000=±1.6		
DRAWING NO. BNC 02GV1 DGN	REVISION	DATE	30-120=±0.6 1000-2000=±2.4		
			SCALE 4:1 SIZE A		