RoHS Compliant

Drawing For Reference Only

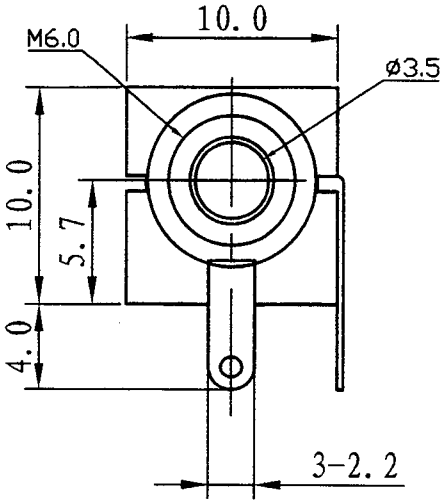

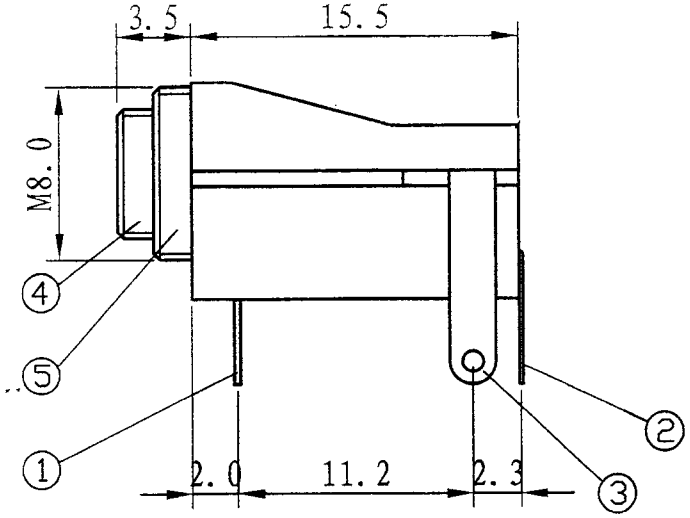

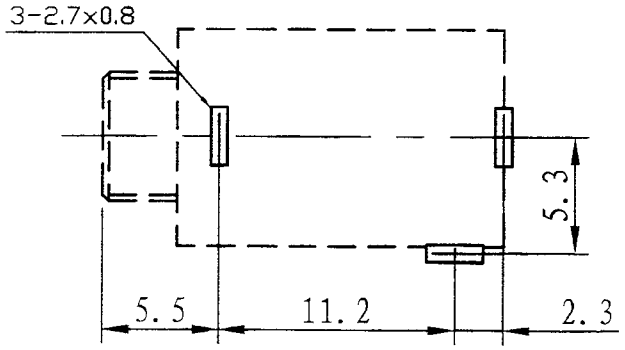

P.C.B LAYOUT

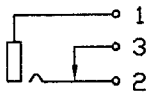

SCHEMATIC

NO.	PARTS	MATERIALS	Q'TY	REMARKS
5.	Case	PA66 / PBT	1	Black
4.	Socket	Brass H59	1	Ni Plated
3	Terminal	Brass H62	3	Ag Plated Over Ni Plated
2	Audio Terminal	PBS Strip	1	Ag Plated Over Ni Plated
1	Ground Terminal	Brass Strip H62	2	Ag Plated Over Ni Plated

Technical requirement :
1. This product should meet EU RoHS related requirement.
2. The surface of plastic part should be without any crackle such as burr,lack,and so on phenomenon.
3. The surface of metal part should be without any defect such as scaur,nick,oxidation and plating problem.
4. The electronic performance should be the same as spec.
5. The un-specified tolerance is : <6± 0.2
6~20± 0.3
>20± 0.4

DRAGON CITY INDUSTRIES LIMITED			Design	K.W Law	Remark		Scale	
			Drawing	W.K Yeung	Remark		Material	
Item Name	3.5MM PHONE JACK WITH NUT	Tolerance :	Check	K.L Wong	Remark		Drawing No.	A30129-1622
Item No.	PY-601C-A(SL)	Unit : mm	Approval	K.W Chan	Remark		Sheet	