FORDATA
FOR DATA DISPLAY

classic mono LCDs

SPECIFICATION

CHARACTER TYPE

DOT MATRIX LCD MODULE

ITEM NUMBER:	**FDCC1604A-NSWBBW-51SR**
ESTABLISHED DATE:	**2010.05**
DATASHEET VERSION:	**2008 VERSION**

ISSUED BY: 魏燕东 **CHECKED BY:** 金智良 **APPROVED BY:** 金智良

COPYRIGHT © 2000 ~ 2008 FORDATA ELECTRONIC CO., LTD. ALL RIGHTS RESERVED

FORDATA ELECTRONIC CO.,LTD PROFESSIONAL LCD SUPPLIER FROM CHINA	STANDARD DOC.	DATASHEET STATEMENT

1. The following icons are absolutely designed by FORDATA independently in 2007-SEP. They are not in common use in the LCD industry yet but just used for marking out FORDATA products' characteristics quickly and simply without any special meaning. FORDATA reserves the composing right and copyright.
   No one else is allowed to adopt these icons without FORDATA's approval.

2. The ISO9001 logo used in this document is authorized by SGS (www.sgs.com). FORDATA had already successfully passed the strict and professional ISO9001:2000 Quality Management System Certification and got the certificate (No.: CN07/00404)

3. The technologies/techniques/crafts which denoted by the following icons are not exclusively owned by FORDATA, but also shared by FORDATA's LCD strategic cooperators, however all these technologies/techniques/crafts have been finally confirmed by FORDATA's professional engineers and QC department.

4. As the difference in test standard and test conditions, also FORDATA's insufficient familiarity with the actual LCD using environment, all the referred information in this DATASHEET (including the icons) only have two functions:
   4.1: providing quick reference when you are judging whether or not the product meets your requirements.
   4.2: listing out definitely the tolerance.

   FORDATA declares seriously: you should first test the corresponding sample(s) before signing the formal FORDATA SAMPLE APPROVAL document rather than consider this DATASHEET as the standard for judging whether or not the LCD meets your requirements. Once you instruct FORDATA to a mass-production without definite demand for providing sample before, FORDATA will disclaim all responsibility if the mass-production is proved not meeting with your requirements.

5. The sequence of the icons is random and doesn't indicate the importance grade.

6. Icons explanation

FORDATA FOR DATA DISPLAY

FORDATA's 2006 version logo. FORDATA is an integrated manufacturer of flat panel display (FPD). FORDATA supplies TN, HTN, STN, FSTN monochrome LCD panel; COB, COG, TAB LCD module; and all kinds of LED backlight.

classic mono LCDs

FAST RESPONSE TIME
This icon on the cover indicates the product is with high response speed; Otherwise not.

PROTECTION CIRCUIT
This icon on the cover indicates the product is with protection circuit; Otherwise not.

HIGH CONTRAST
This icon on the cover indicates the product is with high contrast; Otherwise not.

LONG LIFE VERSION
This icon on the cover indicates the product is long life version (over 9K hours guaranteed); Otherwise not.

WIDE VIEWING SCOPE
This icon on the cover indicates the product is with wide viewing scope; Otherwise not.

Anti UV VERSION
This icon on the cover indicates the product is against UV line. Otherwise not.

RoHS COMPLIANCE
This icon on the cover indicates the product meets ROHS requirements; Otherwise not.

OPERATION TEMPERATURE RANGE
This icon on the cover indicates the operating temperature range (X-Y).

3TIMEs 100% QC EXAMINATION
This icon on the cover indicates the product has passed FORDATA's thrice 100% QC. Otherwise not.

TWICE SELECTION OF LED MATERIALS
This icon on the cover indicates the LED had passed FORDATA's twice strict selection which promises the product's identical color and brightness; Otherwise not.

VIcm = 3.0V
This icon on the cover indicates the product can work at 3.0V exactly; otherwise not.

N SERIES TECHNOLOGY (2008 developed)
FORDATA adopts new structure, new craft, new technology and new materials inside both LCD module and LCD panel to improve the "RainBow"

NO.	DATE	DESCRIPTION	ITEM	PAGE	APPROVED
1	2010.05	INITIAL ISSUED	ALL	ALL	

1	2	3	4	5	6	7	8	9	10	11	12	13	14	15	16
FD	C	C	08	01	A	F	L	Y	Y	B	W	5	2	L	E

No.	REMARKS	DESCRIPTION
1	COMPANY ABBRAVIATED	FD = FORDATA
2	IC packing	C = Chip On Board G = Chip On Glass T = TAB
3	LCM type	C = Character G = Graphic
4	Chyaracter	08, 10, 12, 16, 20, 24, 40, = Character number Per line
	Graphic	80, 100, 120, 122, 128, 160 ... ... = Row Dots Quantity
5	Character	01, 02, 04, = Character Lines
	Graphic	32, 64, 80, 128, 160 ... ... =Column Dots Quantity
6	Serial Number	A~Z
7	Polarizer type	R = Positive Reflective F = Positive Transflective M = Positive Transmissive N = Negative Transmissive E = Negative, Transflective B = Negative, Dual optical compensation (for FSTN type only)
8	Backlight type	N = No Backlight L = Array Type LED Backlight S = Edge Type LED Backlight E = EL backlight without Invertor F = EL backlight with Invertor C = CCFL backlight without Invertor T = CCFL backlight with Invertor
9	Backlight color	N = No Backlight Y = Yellow-Green W = White R = Red A = Amber C = Blue-Green B = Blue G = Green
10	LCD panel type	T = TN H = HTN Y = Yellow-Green STN G = Gray STN B = Blue STN F = FSTN
11	Viewing angle	B = Bottom 6:00 T = Top 12:00 R = Right 3:00 L = Left 9:00
12	Operation temperature range	S = 0°C ~ 50°C (Single Supply Voltage) D = 0°C ~ 50°C (Dual Supply Voltage) W = -20°C ~ 70°C (Single Supply Voltage) H = -20°C ~ 70°C (Dual Supply Voltage) T = -30°C ~ 80°C (Single Supply Voltage) E = -30°C ~ 80°C (Dual Supply Voltage)
13	Driving Voltage	1 : Vlcm = 3.0V, No / EL / CCFL Backlight or Vlcm = 3.0V, Vled = LED voltage, (Via AK) 2 : Vlcm = 3.6V, Vled = 5.0V (Not via AK) 3 : Vlcm = 3.6V, Vled = LED voltage, (Not via AK) 4 : Vlcm = 5.0V, Vled = LED voltage, (Not via AK) 5 : Vlcm = 5.0V, Vled = 5.0V (Not via AK) 6 : Vlcm = 5.0V, No / EL / CCFL Backlight or Vlcm = 5.0V, Vled = LED voltage, (Via AK) 7 : Vlcm = 3.6V, No / EL / CCFL Backlight or Vlcm = 3.6V, Vled = LED voltage, (Via AK) 8 : Vlcm = 3.0V, Vled = 5.0V 9 : Vlcm = 3.0V, Vled = LED voltage, (Not via AK)
14	Backlight Connect Method	0 = PIN1 LED-, PIN2 LED+ 1 = PIN15(17/19) LED+, PIN16(18/20) LED- 2 = PIN15(17/19) LED-, PIN16(18/20) LED+ 3 = PIN15(17/19) LED+, PIN16(18/20) NC 4 = PIN15(17/19) NC, PIN16(18/20) LED+ 5 = PINA LED+, PINK LED- 6 = No / EL / CCFL Backlight
15	IC Manufacturer	X = SAMSUNG L = SUNPLUS S = SITRONIX T = TOSHIBA E = EPSON H = HOLTEK Q = ASLIC N = CIMTEK P = PRINCETON
16	Font Set	R = English - Russia E = English - Japanese U = English - Europe H = English - Hebrew K = English - Europe N = NO FONT SET

1. GENERAL SPECIFICATIONS ---------- Page 4
2. MECHANICAL SPECIFICATIONS ---------- Page 4
3. ABSOLUTE MAXIMUM RATINGS ---------- Page 4
4. ELECTRONICAL CHARACTERISTIC ---------- Page 4
5. OPTICAL CHARACTERISTICS ---------- Page 5
6. ELECTRICAL SPECIFICATIONS ---------- Page 6
7. EXTERNAL DIMENSION ---------- Page 8
8. PIN ASSIGNMENT ---------- Page 9
9. POWER SUPPLY ---------- Page 9
10. REFLECTOR OF SCREEN AND DDRAM ADDRESS ---------- Page 9
11. INSTRUCTION TABLE ---------- Page 10
12. INSTRUCTION DESCRIPTION ---------- Page 11
13. CGRAM ---------- Page 15
14. DDRAM ---------- Page 15
15. INITIALIZATION ---------- Page 16
16. INTERFACE TO MPU ---------- Page 18
17. FONT MAP ---------- Page 19
18. PACKING DETAIL ---------- Page 20

1. GENERAL SPECIFICATIONS

ITEM	NOMINAL DIMENSIONS / AVAILABLE OPTIONS
DISPLAY FORMAT	16 Characters by 4 Lines
LCD PANEL OPTIONS	STN (Blue color)
POLARIZER OPTIONS	Negative, Transmissive
BACKLIGHT OPTIONS	Edge type LED backlight (White color)
VIEWING ANGLE OPTIONS	6:00 (Bottom)
TEMPERATURE RANGE OPTIONS	Wide temp. range (-20°C ~ 70°C)
CONTROLLER IC	SITRONIX
DISPLAY DUTY	1/16
DRIVING BIAS	1/5

2. MECHANICAL SPECIFICATIONS

OVERALL SIZE	LED backlight version : 87.0 x 60.0 x max 14.0				mm
VIEWING AREA	61.8W x 25.2H	mm	HOLE-HOLE	82.0W x 55.0H	mm
CHARACTER SIZE	2.95W x 4.75H	mm	CHARACTER PITCH	0.60W x 0.60H	mm
DOT SIZE	0.55W x 0.55H	mm	DOT PITCH	0.05W x 0.05H	mm

3. ABSOLUTE MAXIMUM RATINGS

ITEM	SYMBOL	CONDITION	MIN	MAX	UNIT
POWER SUPPLY (LOGIC)	Vdd	25°C	-0.3	7.0	V
POWER SUPPLY (LCD)	V0	25°C	Vdd -13.5	Vdd +0.3	V
INPUT VOLTAGE	Vin	25°C	-0.3	Vdd +0.3	V
OPERATING TEMPERATURE	Vopr	–––	-20	70	°C
STORAGE TEMPERATURE	Vstg	–––	-30	80	°C

4. ELECTRONICAL CHARACTERISTIC*

ITEM	SYMBOL	CONDITION	STANDARD			UNIT
			MIN	TYP	MAX	
Input voltage	Vdd	+5V	4.7	5.0	5.5	V
Supply current	Idd	Vdd=5V	–––	1.5	–––	mA
Recommended LCD driving voltage for normal temp. Version module	Vdd - V0	-20°C	4.60	–––	4.90	V
		0°C	4.35	–––	4.75	
		25°C	4.25	4.50	4.65	
		50°C	4.15	–––	4.60	
		70°C	4.00	–––	4.50	
LED forward voltage	Vf	25°C	2.9	–––	3.4	V
LED forward current	If	25°C	–––	15	20	mA
LED reverse Current	Ir	25°C	–––	10	–––	μA
LED color range	X coordinate	25°C If = 15mA	0.25	–––	0.28	–––
	Y coordinate	25°C If = 15mA	0.26	–––	0.29	–––
LED illuminance (Without LCD)	Lv	25°C If = 15mA	150	–––	180	cd/m²
LED life time	–––	25°C If = 15mA	9K**	–––	–––	Hours

* The above data are for reference only.

** The warranty period of FORDATA LCD module is 1YEAR counted from the date shown on the label of products.

** If you wanted to drive the LED BKL uninterruptedly exceed 12hours/day, you are not suggested this version

5. OPTICAL CHARACTERISTIC

FOR TN TYPE LCD MODULE (T_A=25 °C, Vdd=5.0V ± 0.25V)

ITEM	SYMBOL	CONDITION	MIN	TYP	MAX	UNIT
VIEWING ANGLE	Φ2 – Φ1	K=4	30	–––	–––	deg
	θ		25			
CONTRAST RATIO	K	–––	–––	2	–––	–––
RESPONSE TIME(RISE)	T_R	–––	–––	120	150	ms
RESPONSE TIME(FALL)	T_F	–––	–––	120	150	ms

FOR STN TYPE LCD MODULE (T_A=25 °C, Vdd=5.0V ± 0.25V)

ITEM	SYMBOL	CONDITION	MIN	TYP	MAX	UNIT
VIEWING ANGLE	Φ2 – Φ1	K=4	40	–––	–––	deg
	θ		60			
CONTRAST RATIO	K	–––	–––	6	–––	–––
RESPONSE TIME(RISE)	T_R	–––	–––	150	250	ms
RESPONSE TIME(FALL)	T_F	–––	–––	150	250	ms

DEFINITION OF ANGLE Φ & θ

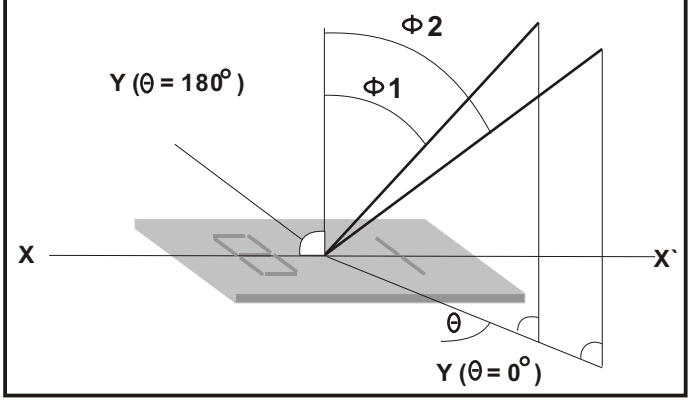

DEFINITION OF VIEWING ANGLE Φ1 & Φ2

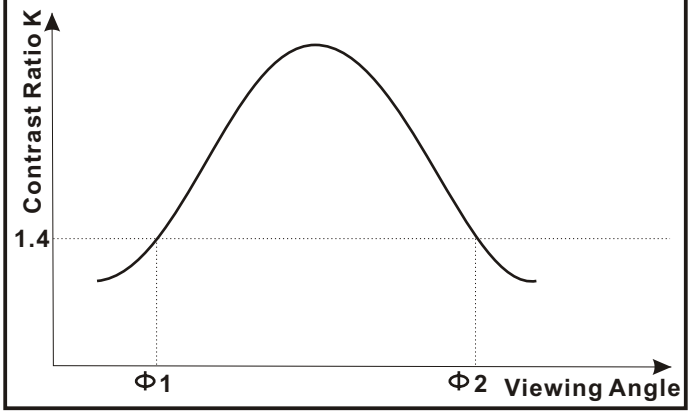

DEFINITION OF CONTRAST RATIO K(=B_2/B_1)

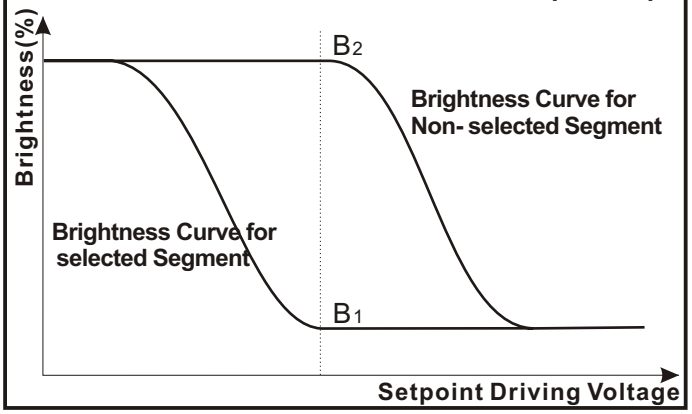

DEFINITION OF OPTICAL RESPONSE TIME T_R & T_F

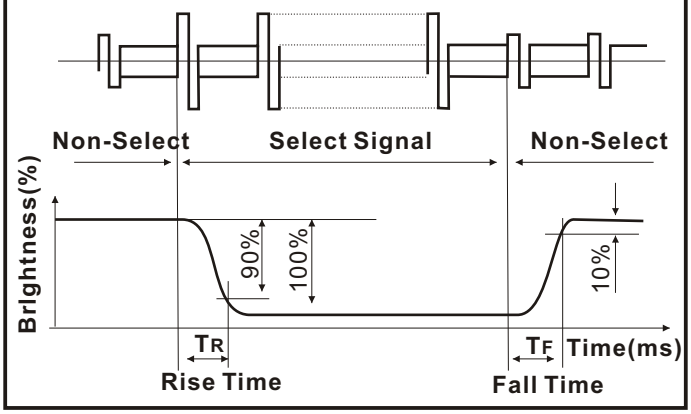

6. ELECTRICAL SPECIFICATIONS

6.1 DC CHARACTERISTICS (VDD = 4.5V to 5.5V, TA = 25°C)

CHARACTERISTICS	SYMBOL	LIMIT			UNIT	TEST CONDITION
		MIN.	TYP.	MAX.		
INPUT HIGH VOLTAGE	V_{IH1}	0.7Vdd	---	Vdd	V	Pins (E. RS. R/W. DB0 - DB7)
INPUT LOW VOLTAGE	V_{IL1}	-0.3	---	0.6	V	
INPUT HIGH CURRENT	I_{IH}	-1.0	---	1.0	μA	Pins (RS. R/W. DB0 - DB7) Vdd = 5.0V
INPUT LOW CURRENT	I_{IL}	-50	-110	-180	μA	
OUTPUT HIGH VOLTAGE (TTL)	V_{OH1}	3.9	---	Vdd	V	I_{OH} = - 0.1mA Pins: DB0 - DB7
OUTPUT LOW VOLTAGE (TTL)	V_{OL1}	---	---	0.4	V	I_{OL} = 0.1mA Pins: DB0 - DB7

6.2 AC CHARACTERISTICS (VDD = 4.5V to 5.5V, TA = 25°C)

Write mode

CHARACTERISTICS	SYMBOL	LIMIT			UNIT	TEST CONDITION
		MIN.	TYP.	MAX.		
ENABLE CYCLE TIME	t_C	1200	---	---	ns	Pin E
ENABLE PULSE WIDTH	t_{PW}	140	---	---	ns	Pin E
ENABLE RISE/ FALL TIME	t_R, t_F	---	---	25	ns	Pin E
ADDRESS SETUP TIME	t_{SP1}	0	---	---	ns	Pins RS, R/W, E
ADDRESS HOLD TIME	t_{HD1}	10	---	---	ns	Pins RS, R/W, E
DATA SETUP TIME	t_{SP2}	40	---	---	ns	Pins: DB0 - DB7
DATA HOLD TIME	t_{HD2}	10	---	---	ns	Pins: DB0 - DB7

Read mode

CHARACTERISTICS	SYMBOL	LIMIT			UNIT	TEST CONDITION
		MIN.	TYP.	MAX.		
ENABLE CYCLE TIME	t_C	1200	---	---	ns	Pin E
ENABLE PULSE WIDTH	t_{PW}	140	---	---	ns	Pin E
ENABLE RISE/ FALL TIME	t_R, t_F	---	---	25	ns	Pin E
ADDRESS SETUP TIME	t_{SP1}	0	---	---	ns	Pins RS, R/W, E
ADDRESS HOLD TIME	t_{HD1}	10	---	---	ns	Pins RS, R/W, E
DATA OUTPUT DELAY TIME	t_D	---	---	100	ns	Pins: DB0 - DB7
DATA HOLD TIME	t_{HD2}	10	---	---	ns	Pins: DB0 - DB7

6.3.1 WRITE MODE TIMING DIAGRAM

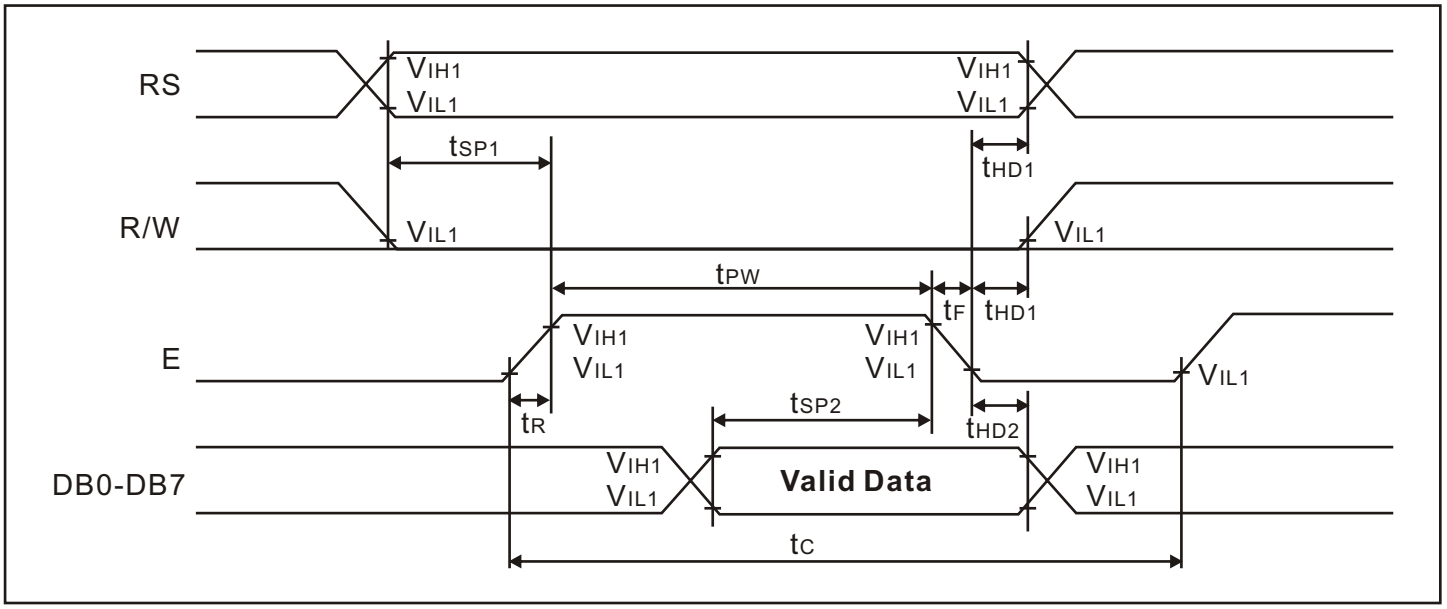

6.3.2 READ MODE TIMING DIAGRAM

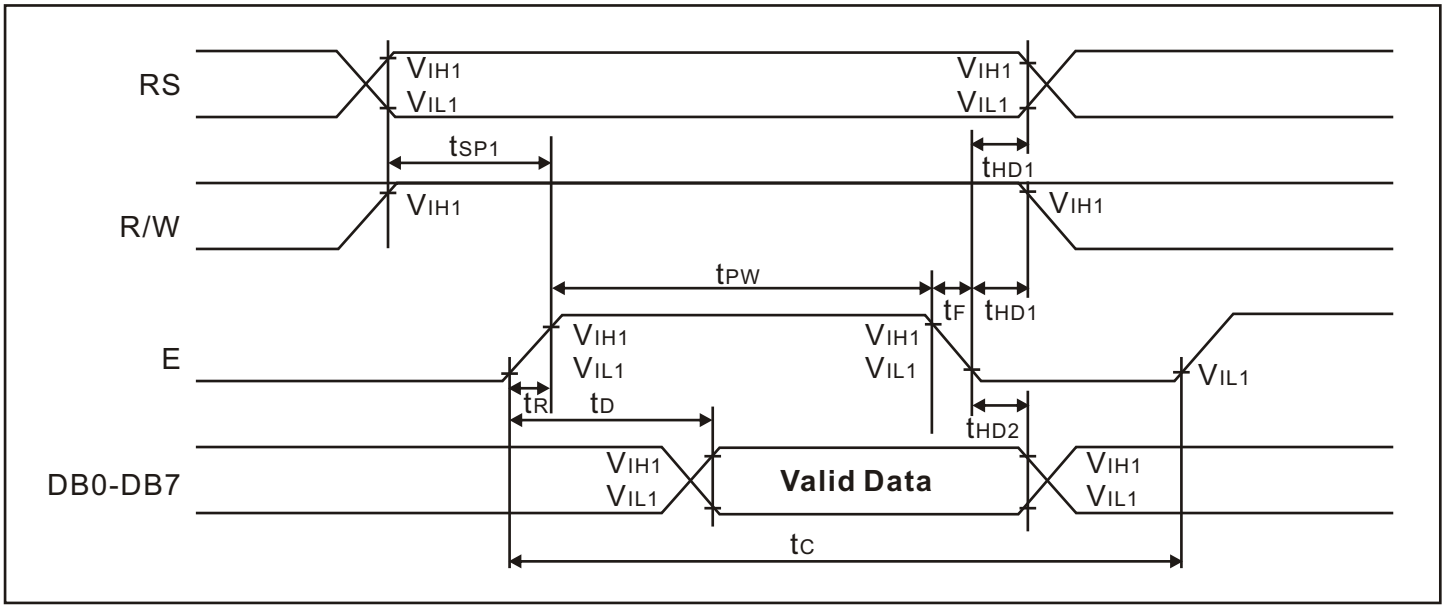

7. EXTERNAL DIMENSIONS

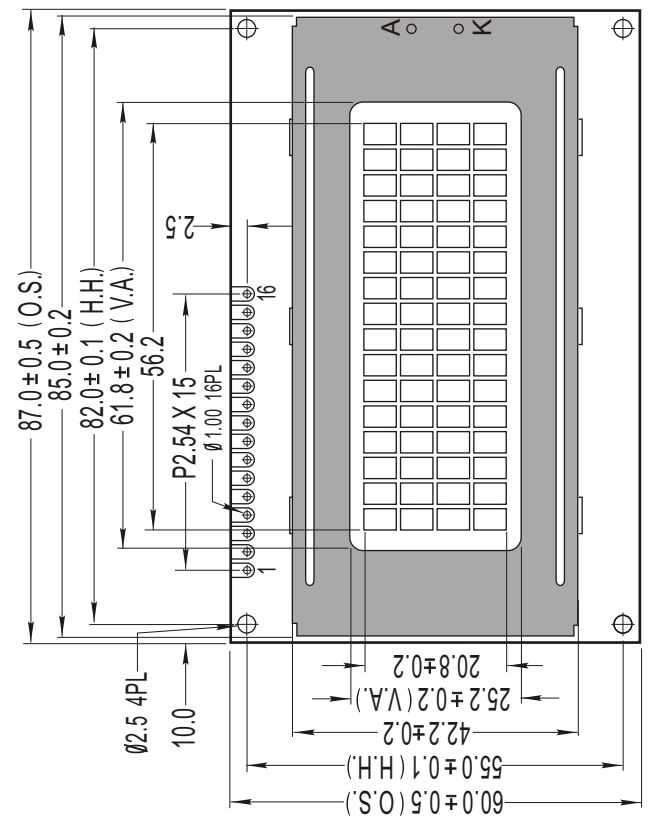

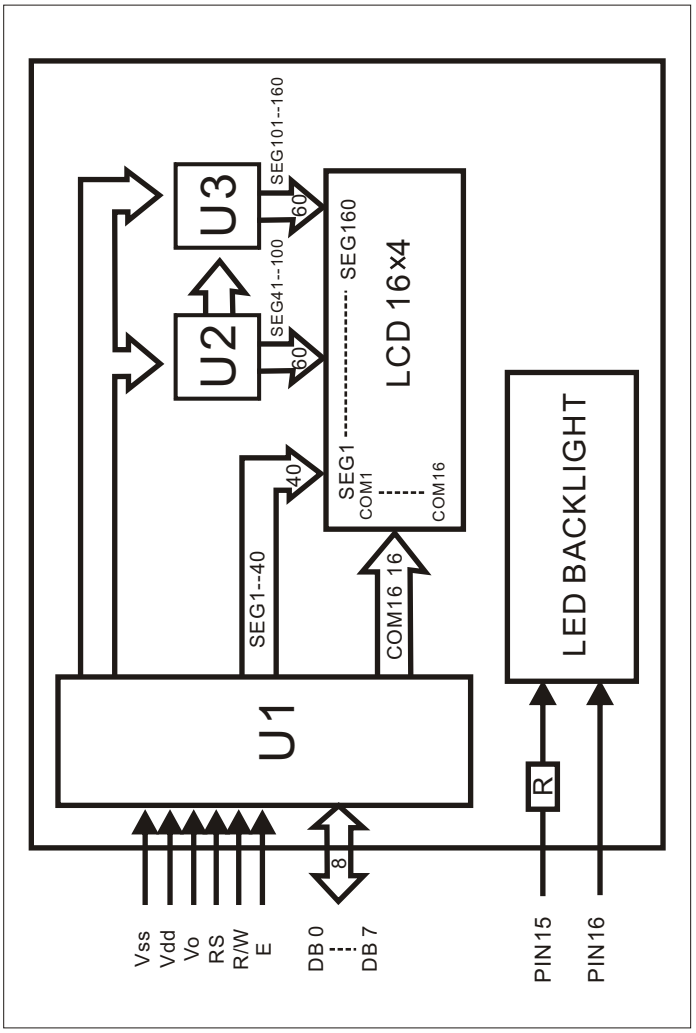

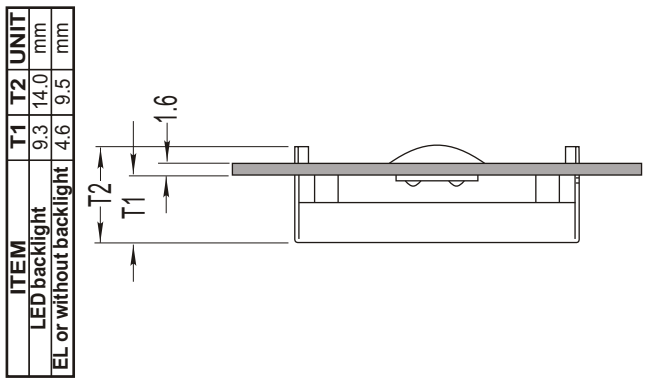

ITEM	T1	T2	UNIT
LED backlight	9.3	14.0	mm
EL or without backlight	4.6	9.5	mm

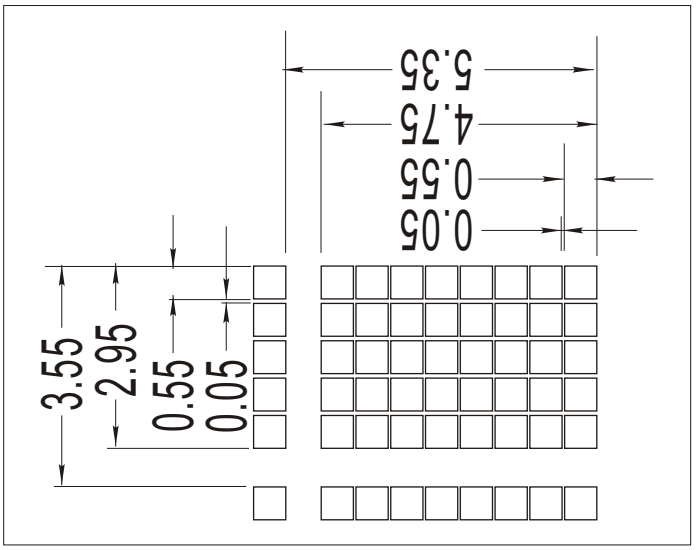

8.PIN ASSIGNMENT

PIN	SYMBOL	FUNCTION
1	Vss	GND
2	Vdd	Power supply for LCM (+5.0V)
3	V0	Contrast Adjust
4	RS	Register Select Signal
5	R/W	Data Read / Write
6	E	Enable Signal
7-14	DB0 - DB7	Data bus line
15	LED+	Power supply for BKL (+5.0V)
16	LED-	Power supply for BKL (0V)

9.POWER SUPPLY

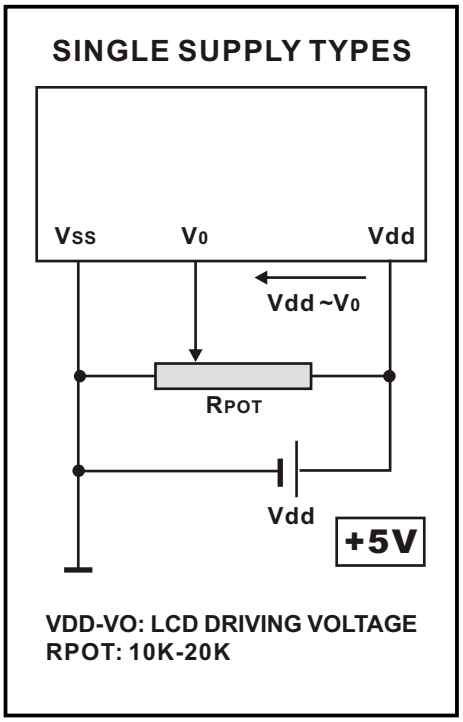

10. REFLECTOR OF SCREEN AND DDRAM ADDRESS

Display position	1-1	1-2	1-3	1-4	1-5	1-6	1-7	1-8	1-9	1-10
DDRAM address	00	01	02	03	04	05	06	07	08	09
Display position	1-11	1-12	1-13	1-14	1-15	1-16	3-1	3 -2	3-3	3-4
DDRAM address	0A	0B	0C	0D	0E	0F	10	11	12	13
Display position	3-5	3-6	3-7	3-8	3-9	3-10	3-11	3-12	3-13	3-14
DDRAM address	14	15	16	17	18	19	1A	1B	1C	1D
Display position	3-15	3-16								
DDRAM address	1E	1F	20	21	22	23	24	25	26	27
Display position	2-1	2-2	2-3	2-4	2-5	2-6	2-7	2-8	2-9	2-10
DDRAM address	40	41	42	43	44	45	46	47	48	49
Display position	2-11	2-12	2-13	2-14	2-15	2-16	4-1	4-2	4-3	4-4
DDRAM address	4A	4B	4C	4D	4E	4F	50	51	52	53
Display position	4-5	4-6	4-7	4-8	4-9	4-10	4-11	4-12	4-13	4-14
DDRAM address	54	55	56	57	58	59	5A	5B	5C	5D
Display position	4-15	4-16								
DDRAM address	5E	5F	60	61	62	63	64	65	66	67

1-1 means first character of line 1 on screen

11. INSTRUCTION TABLE

Instruction	Instruction Code										Description	Execution Time(fosc= 270kHz)
	RS	R/W	DB7	DB6	DB5	DB4	DB3	DB2	DB1	DB0		
Clear Display	0	0	0	0	0	0	0	0	0	1	Write 20H to DDRAM set DDRAM address to 00H from AC	1.52ms
Return Home	0	0	0	0	0	0	0	0	1	-	Set DDRAM address to 00H from AC and return cursor to its original position if shifted. The contents of DDRAM are not changed.	1.52ms
Entry Mode Set	0	0	0	0	0	0	0	1	I/D	SH	Assign cursor moving direction and enable the shift of entire display	37μs
Display ON/OFF Control	0	0	0	0	0	0	1	D	C	B	Set display(D) cursor(C) and blinking of cursor(B) on/off	37μs
Cursor or Display Shift	0	0	0	0	0	1	S/C	R/L	-	-	Set cursor moving and display shift control bit, and the direction, without changing DDRAM data	37μs
Function Set	0	0	0	0	1	DL	N	F	-	-	Set interface data length(DL:8bit/4bit), number of display line (N:2line/1line) and,display font type F:5X11dots / 5X8dots	37μs
Set CGRAM Address	0	0	0	1	AC5	AC4	AC3	AC2	AC1	AC0	Set CGRAM address in address counter	37μs
Set DDRAM Address	0	0	1	AC6	AC5	AC4	AC3	AC2	AC1	AC0	Set DDRAM address in address counter	37μs
Read Busy Flag and Address	0	1	BF	AC6	AC5	AC4	AC3	AC2	AC1	AC0	Whether during internal operation or not can be known by reading BF The contents of address counter can also be read	0 μs
Write Data to RAM	1	0	D7	D6	D5	D4	D3	D2	D1	D0	Write data into internal RAM (DDRAM/CGRAM)	37μs
Read data from RAM	1	1	D7	D6	D5	D4	D3	D2	D1	D0	Read data from internal RAM (DDRAM/CGRAM)	37μs

12. INSTRUCTION DESCRIPTION

A. Clear Display

RS	R/W	DB7	DB6	DB5	DB4	DB3	DB2	DB1	DB0
0	0	0	0	0	0	0	0	0	1

Clear all the display data by writing 20H (space code) to all DDRAM address, and set DDRAM address to 00H into AC (address counter).
Return cursor to the original status, namely, bring the cursor to the left edge on the first line of the display.
Make the entry mode increment (I/D = HIGH)

B. Return Home

RS	R/W	DB7	DB6	DB5	DB4	DB3	DB2	DB1	DB0
0	0	0	0	0	0	0	0	1	-

Set DDRAM address to 00H into the address counter.
Return cursor to its original site and return display to its original status,if shifted.
Contents of DDRAM does not change.

C. Entry Mode Set

RS	R/W	DB7	DB6	DB5	DB4	DB3	DB2	DB1	DB0
0	0	0	0	0	0	0	1	I/D	SH

Set the moving direction of cursor and display.

I/D:Increment /decrement of DDRAM address(cursor or blink)

I/D=High,cursor/blink moves to right and DDRAM address is increased by 1.

I/D=low,cursor/blink moves to left and DDRAM address is decreased by 1.

*CGRAM operates the same way as DDRAM, when reading from or writing to CGRAM.

SH:Shift of entire display

When DDRAM read (CGRAM read/write) operation or SH=Low,shifting of entire display is not performed.if SH=High, and DDRAM write operation,shift of entire display is performed according to I/D value(I/D=High,shift left, I/D=Low, shift right).

D. Display ON/OFF Control

RS	R/W	DB7	DB6	DB5	DB4	DB3	DB2	DB1	DB0
0	0	0	0	0	0	1	D	C	B

D:Display ON/OFF control bit
When D=High, entire display is turned on.
When D=Low, display is turned off, but display data remains in DDRAM.
C:Cursor ON/OFF control bit
When C=High, cursor is turned on.
When C=Low, cursor is disappeared in current display ,but I/D register preserves its data.
B:Cursor Blink ON/OFF control bit
When B=High, cursor blink is on, which performs alternately between all the High data and display characters at the cursor position.
When B=Low ,blink is off.

E. Cursor or Display Shift

RS	R/W	DB7	DB6	DB5	DB4	DB3	DB2	DB1	DB0
0	0	0	0	0	1	S/C	R/L	-	-

Shifting of right/left cursor position or display without writing or reading of display data.
This instruction is used to correct or search display data.
During 2-line mode display, cursor moves to the 2nd line after the 40th digit of the 1st line.
Note that display shift is performed simultaneously in all the lines.
When displayed data is shifted repeatedly, each line is shifted individually.
When display shift is performed, the contents of the address counter are not changed.

S/C	R/L	Operation
0	0	Shift cursor to the left, AC is decreased by 1
0	1	Shift cursor to the right, AC is increased by 1
1	0	Shift all the display to the left,cursor moves according to the display
1	1	Shift all the display to the right,cursor moves according to the display

F. Function set

RS	R/W	DB7	DB6	DB5	DB4	DB3	DB2	DB1	DB0
0	0	0	0	1	DL	N	F	-	-

DL:Interface data length control bit
When DL=High, it means 8-bit bus mode with MPU.
When DL=Low, it means 4-bit bus mode with MPU.
When 4-bit bus mode, it needs to transfer 4-bit data twice.
N:Display line number control bit
When N=Low, 1-line display mode is set.
When N=High, 2-line display mode is set.
F:Display font type control bit
When F=Low, 5x8 dots format display mode is set.
When F=High, 5x11 dots format display mode.

G. Set CGRAM Address

RS	R/W	DB7	DB6	DB5	DB4	DB3	DB2	DB1	DB0
0	0	0	1	AC5	AC4	AC3	AC2	AC1	AC0

Set CGRAM address to AC.
This instruction makes CGRAM data available from MPU.

H. Set DDRAM Address

RS	R/W	DB7	DB6	DB5	DB4	DB3	DB2	DB1	DB0
0	0	1	AC6	AC5	AC4	AC3	AC2	AC1	AC0

Set DDRAM address to AC.
This instruction makes DDRAM data available from MPU.
When 1-line display mode (N=Low), DDRAM address is from 00H to 4FH
In 2-line display mode(N=High),DDRAM address in the 1st line is from 00H to 27H and DDRAM address in the 2nd line is from 40H to 67H

I. Read Busy Flag & Address

RS	R/W	DB7	DB6	DB5	DB4	DB3	DB2	DB1	DB0
0	1	BF	AC6	AC5	AC4	AC3	AC2	AC1	AC0

This instruction shows whether IC is in internal operation or not .
If BF is High, internal operation is in progress and shall wait until BF is to be Low, which by then the next instruction can be performed. In this instruction you and also read the value of the address counter.

J. Write data to RAM

RS	R/W	DB7	DB6	DB5	DB4	DB3	DB2	DB1	DB0
1	0	D7	D6	D5	D4	D3	D2	D1	D0

Write binary 8-bit data to DDRAM/CGRAM.
The selection of RAM from DDRAM,and CGRAM,is set by the previous address set instruction(DDRAM address set,CGRAM address set).
RAM set instruction can also determine the AC direction to RAM.
After write operation, the address is automatically increased /decreased by 1,according the entry mode.

K. Read data from RAM

RS	R/W	DB7	DB6	DB5	DB4	DB3	DB2	DB1	DB0
1	1	D7	D6	D5	D4	D3	D2	D1	D0

Read binary 8-bit data from DDRAM/CGRAM.
The selection of RAM is set by the previous address set instruction.If the address set instruction of RAM is not performed before this instruction, the data that has been read first is invalid, as the direction of AC is not yet determined. If RAM data is read several times without RAM address instructions set before read operation,the correct RAM data can be obtained from the second. But the first data would be incorrect,as there is no time margin to transfer RAM data.

In case of DDRAM read operation,cursor shift instruction plays the same role as DDRAM address set instruction,it also transfers RAM data to output data register.

After read operation,address counter is automatically increased/decreased by 1 according to the entry mode.

After CGRAM read operation,display shift may not be executed correctly.

Note:In case of RAM write operation,AC is increased/decreased by 1 as in read operation. At this time,AC indicates the next address position, but only the previous data can be read by the read instruction.

13. RELATIONSHIP BETWEEN CHARACTER CODE AND CGRAM

Character code	CGRAM Address	CGRAM Data	Pattern number
D7 D6 D5 D4 D3 D2 D1 D0	A5 A4 A3 A2 A1 A0	P7 P6 P5 P4 P3 P2 P1 P0	
0 0 0 0 x 0 0 0	0 0 0 0 0 0	x x x 0 1 1 1 0	pattern 1
	0 0 1	x x x 1 0 0 0 1	
	0 1 0	x x x 1 0 0 0 1	
	0 1 1	x x x 1 1 1 1 1	
	1 0 0	x x x 1 0 0 0 1	
	1 0 1	x x x 1 0 0 0 1	
	1 1 0	x x x 1 0 0 0 1	
	1 1 1	x x x 0 0 0 0 0	
0 0 0 0 x 1 1 1	0 0 0 0 0 0	x x x 1 0 0 0 1	pattern8
	0 0 1	x x x 1 0 0 0 1	
	0 1 0	x x x 1 0 0 0 1	
	0 1 1	x x x 1 1 1 1 1	
	1 0 0	x x x 1 0 0 0 1	
	1 0 1	x x x 1 0 0 0 1	
	1 1 0	x x x 1 0 0 0 1	
	1 1 1	x x x 0 0 0 0 0	

14. DISPLAY DATA RAM(DDRAM)

DDRAM stores display data of maximum 80x8 bits(80 characters).

DDRAM address is set in the address counter(AC) as a hexadecimal number

MSB						LSB
AC6	AC5	AC4	AC3	AC2	AC1	AC0

15. INITIALIZATION

15.1 8-bit interface mode (Condition: fosc = 270KHZ)

Power on

↓

Wait time > 40 ms
After Vdd > 4.5V

↓

Function set

RS	R/W	DB7	DB6	DB5	DB4	DB3	DB2	DB1	DB0
0	0	0	0	1	1	N	F	X	X

← BF cannot be checked before this instruction

↓

Wait time > 37 µs

↓

Function set

RS	R/W	DB7	DB6	DB5	DB4	DB3	DB2	DB1	DB0
0	0	0	0	1	1	N	F	X	X

← BF cannot be checked before this instruction

↓

Wait time > 37 µs

↓

Display ON/OFF Control

RS	R/W	DB7	DB6	DB5	DB4	DB3	DB2	DB1	DB0
0	0	0	0	0	0	1	D	C	B

↓

Wait time > 37 µs

↓

Display Clear

RS	R/W	DB7	DB6	DB5	DB4	DB3	DB2	DB1	DB0
0	0	0	0	0	0	0	0	0	1

↓

Wait time>1.52 ms

↓

Entry Mode Set

RS	R/W	DB7	DB6	DB5	DB4	DB3	DB2	DB1	DB0
0	0	0	0	0	0	0	1	I/D	SH

↓

Initialization end

15.2 4-bit interface mode (Condition: fosc = 270KHZ)

Power on

↓

Wait time > 40 ms
After Vdd > 4.5V

↓

Function set

RS	R/W	DB7	DB6	DB5	DB4	DB3	DB2	DB1	DB0
0	0	0	0	1	1	X	X	X	X

← BF cannot be checked before this instruction

↓

Wait time > 37 µs

↓

Function set

RS	R/W	DB7	DB6	DB5	DB4	DB3	DB2	DB1	DB0
0	0	0	0	1	0	X	X	X	X
0	0	N	F	X	X	X	X	X	X

← BF cannot be checked before this instruction

↓

Wait time > 37 µs

↓

Function set

RS	R/W	DB7	DB6	DB5	DB4	DB3	DB2	DB1	DB0
0	0	0	0	1	0	X	X	X	X
0	0	N	F	X	X	X	X	X	X

← BF cannot be checked before this instruction

↓

Wait time > 37 µs

↓

Display ON/OFF Control

RS	R/W	DB7	DB6	DB5	DB4	DB3	DB2	DB1	DB0
0	0	0	0	0	0	X	X	X	X
0	0	1	D	C	B	X	X	X	X

↓

Wait time > 37 µs

↓

Display Clear

RS	R/W	DB7	DB6	DB5	DB4	DB3	DB2	DB1	DB0
0	0	0	0	0	0	X	X	X	X
0	0	0	0	0	1	X	X	X	X

↓

Wait time>1.52 ms

↓

Entry Mode Set

RS	R/W	DB7	DB6	DB5	DB4	DB3	DB2	DB1	DB0
0	0	0	0	0	0	X	X	X	X
0	0	0	1	I/D	S	X	X	X	X

↓

Initialization end

16.INTERFACE TO MPU

INTERFACE TO 8-BIT MPU

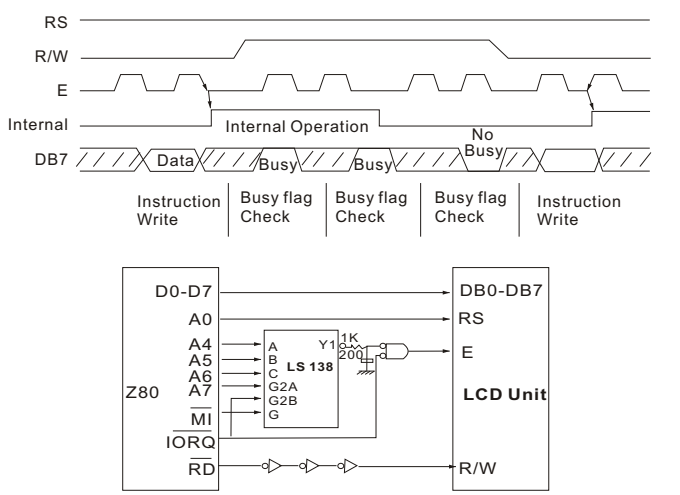

If Interface Data Is 8-bits Long

Data transfer is made through all 8 bus lines from DB0 to DB7

INTERFACE TO 4-BIT MPU

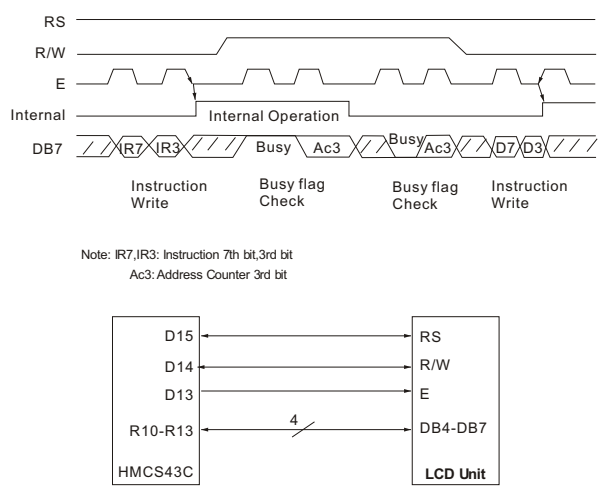

If Interface Data Is 4-bit Long

Data transfer is accomplished through 4 bus lines from DB4 to DB7.(while the rest of 4 bus lines from DB0 toDB3 are not used.)
Data transfer is completed when 4-bits of data is transferred twice.(upper 4-bits of data, then lower 4-bits of data.)

Features

1. **Interface to an 8-bit or 4-bit MPU is available.**
2. **192 types of alphanumeric, symbols and special characters can be displayed with the built - in character generator (ROM).**
3. **Other preferred characters can be displayed by character generator (RAM).**
4. **Various instructions may be programmed.**
   - **Clear display**
   - **Cursor at home**
   - **On/Off cursor**
   - **Blink character**
   - **Shift display**
   - **Shift cursor**
   - **Read/Write display data .etc.**
5. **Compact and light weight design which can easily be integrated into end products.**
6. **Single power supply +5V drive (except for extended temperature type).**
7. **Low power consumption.**

17. STANDARD FONT MAP

Upper 4bit / Lower 4bit	LLLL	LLLH	LLHL	LLHH	LHLL	LHLH	LHHL	LHHH	HLLL	HLLH	HLHL	HLHH	HHLL	HHLH	HHHL	HHHH
LLLL	CG RAM (1)															
LLLH	(2)															
LLHL	(3)															
LLHH	(4)															
LHLL	(5)															
LHLH	(6)															
LHHL	(7)															
LHHH	(8)															
HLLL	(1)															
HLLH	(2)															
HLHL	(3)															
HLHH	(4)															
HHLL	(5)															
HHLH	(6)															
HHHL	(7)															
HHHH	(8)															

18. PACKING DETAIL
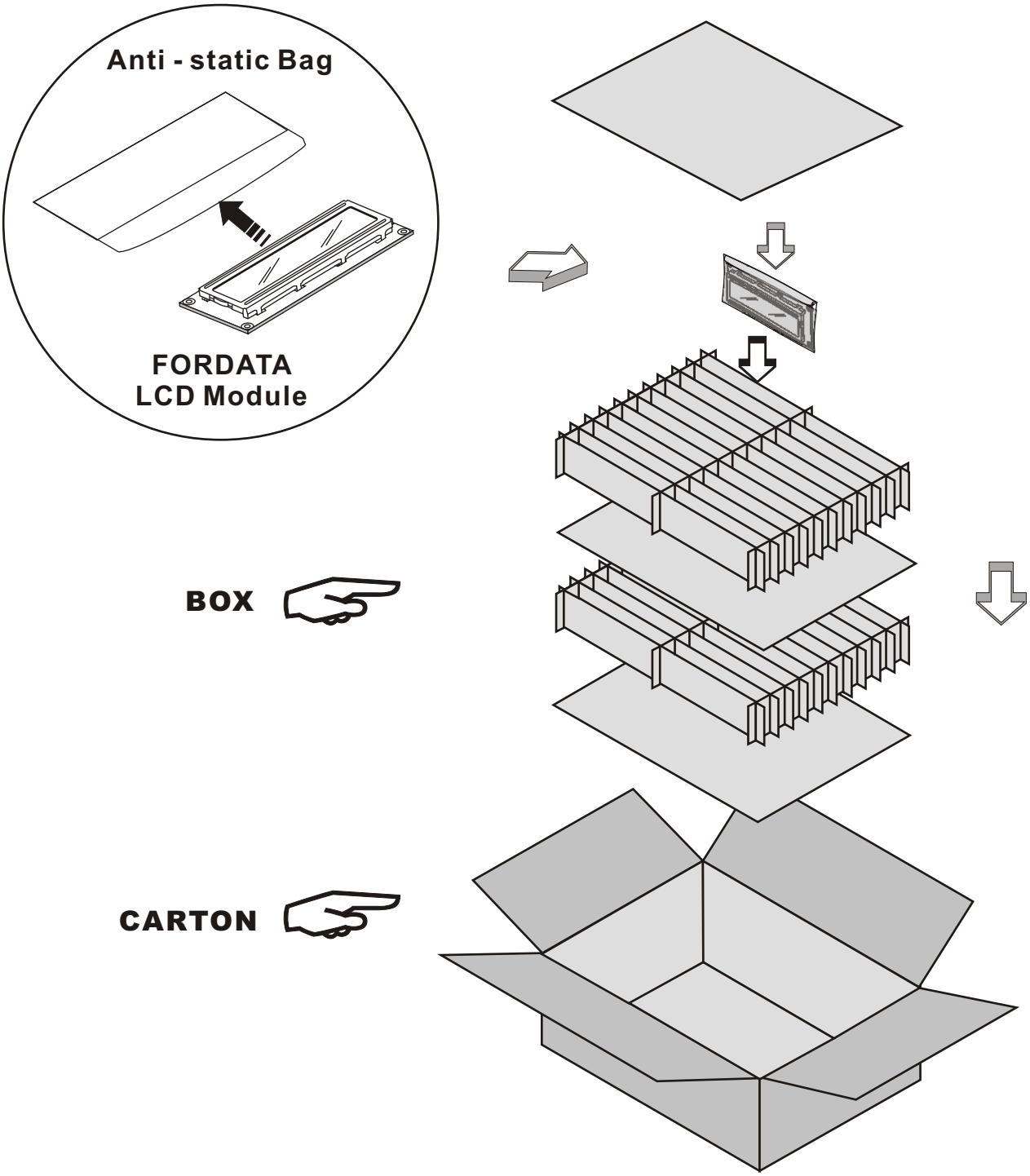
WITH LED BKL	WITHOUT LED BKL	NOTE
30 PCS/BOX	30 PCS/BOX	1. The weight is estimated for reference only.
8 BOXES/CARTON	8 BOXES/CARTON	2. Packing detail may be changed without notice.
240 PCS/CARTON	240 PCS/CARTON	
18.00 KGS/CTN(G.W.)	16.00 KGS/CTN(G.W.)	
0.07 M^3/CARTON	0.07 M^3/CARTON