Mechanical:

REV.	ECN NO.	DESCRIPTION	DATE	APPD
A	REL		2013/09/02	

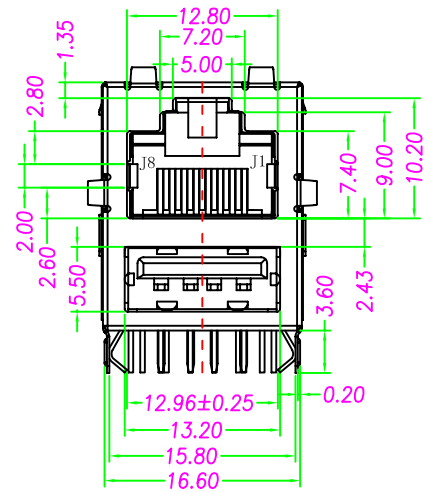

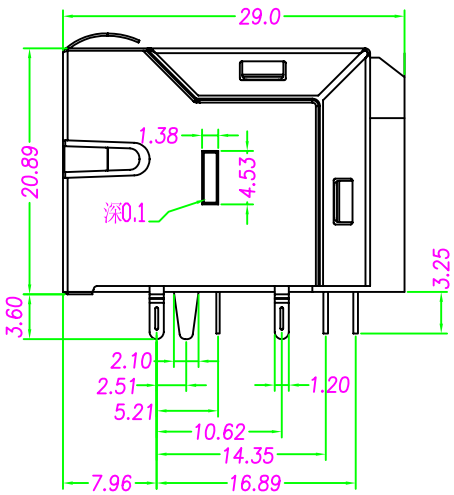

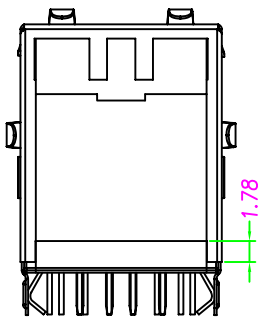

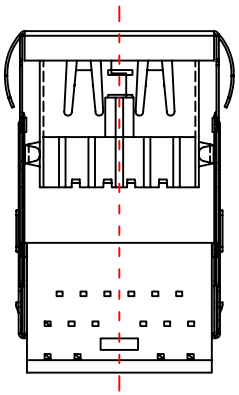

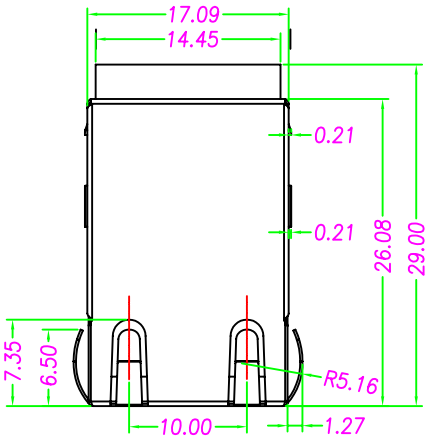

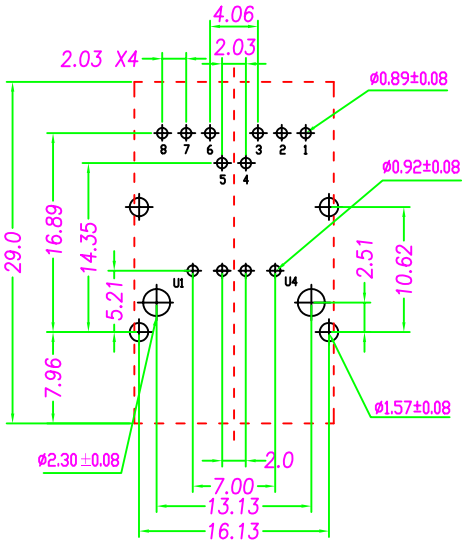

SUGGESTED PCB LAYOUT (TOP VIEW)

Schematic:

NOTES:Electrical:

1. Voltage:125VAC RMS.
2. Current Rating:1.5A.
3. Contact Resistance:30 Millohms max.
4. Insulation Resistance:500 Megohms Min @500VDC.
5. Dielectric Strength:1000VAC RMS 50Hz 1Min.
6. RJ-45 Contact plating: Gold 6 micro-inches min. In contact area
   USB Contact plating: Gold flash
7. Gold Plating:(Gold Flash;1.5;3;6;15;30;50)U″ Inch
8. Wave solder temperture: 230℃ to 250℃,5～10 Sec.

MECHANICAL:

1. Housing Material:Glass Filled Polyester UL94V-0.
2. Contact Material:Phosphor Bronze ⌀ 0.45mm.
3. Plating:Gold Plating Over Nickel.
4. Operating:750 Cycles Min.
5. Shield 0.23mm Thickness Copper Alloy With Nickel Plated.
6. PCB Retention Pre-Solder:1 LB Min.

Environmental:

1. Temperature Range:-45℃～+85℃.
2. Relative Humidity:90～95%(40±2℃)

X:X	±0.30	APPD:	Trxcom ShenZhen Trxcom Electronics Co.,ltd
X:XX	±0.20	CHKD:	
X:XXX	±0.10	DR: C.H.Y	TITLE: RJ45/Single USB Jack
ANGLES	±1°	UNIT: mm	PART NO.: TRJE304CNL

SCALE: 2/1	SHEET: 1/1	REV: A	DWG NO.: TRC13090201	