NO	DESCRIPTION	MATERIAL	Q'TY	FINISH	REMARK
1	BODY	BRASS	1	GOLD	B-SMA0153-G
2	INSULATION	TEFLON	1	TEFLON	I-0016T
3	PIN	BE CU	1	GOLD	P-SMA0098-G
4	NUT	BRASS	1	GOLD	N-0006-G
5	WASHER	BRASS	1	GOLD	W-0016-G

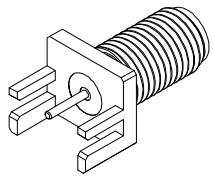

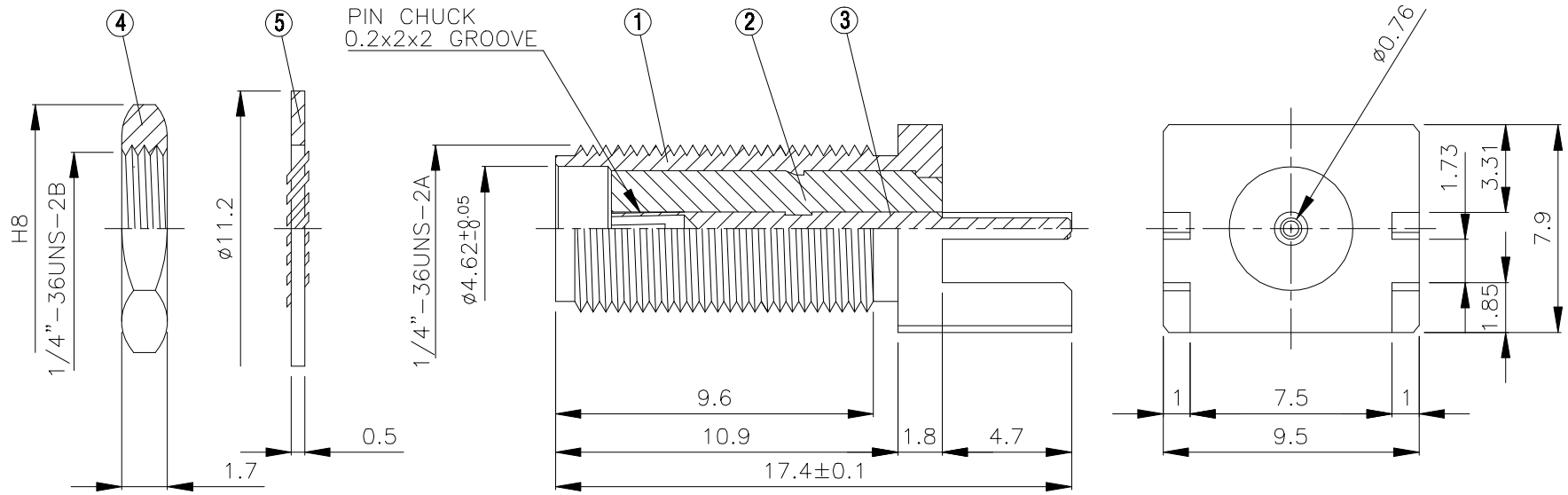

HUS-TSAN GROUP CO., LTD. P.O.BOX 40-76.TAINAN.TAIWAN,R.O.C.	DRAWN MARY	DATE 96.03.27	DIMENSIONS ARE IN MILLMETERS		REVISION
	CHECKED 蘇姿潔	DATE	UNLESS OTHERWISE SPECIFIED TOLERANCE		DESCRIPTION / ENGINEER
TITLE SMA FEMALE END LAUNCH TAB CONTACT (BOARD THICKNESS 1.57)	Q.A. 馮健華	DATE	0.5-5=±0.2 / 120-315=±1		
	APPROVAL 徐燦霖	DATE	5-30= ±0.4 / 315-1000=±1.6		
PART NO. SMA-10V11-TGG			30-120=±0.6 / 1000-2000=±2.4		
DRAWING NO. SMA 10V11 TGG	REVISION	DATE	SCALE 4:1	SIZE A	