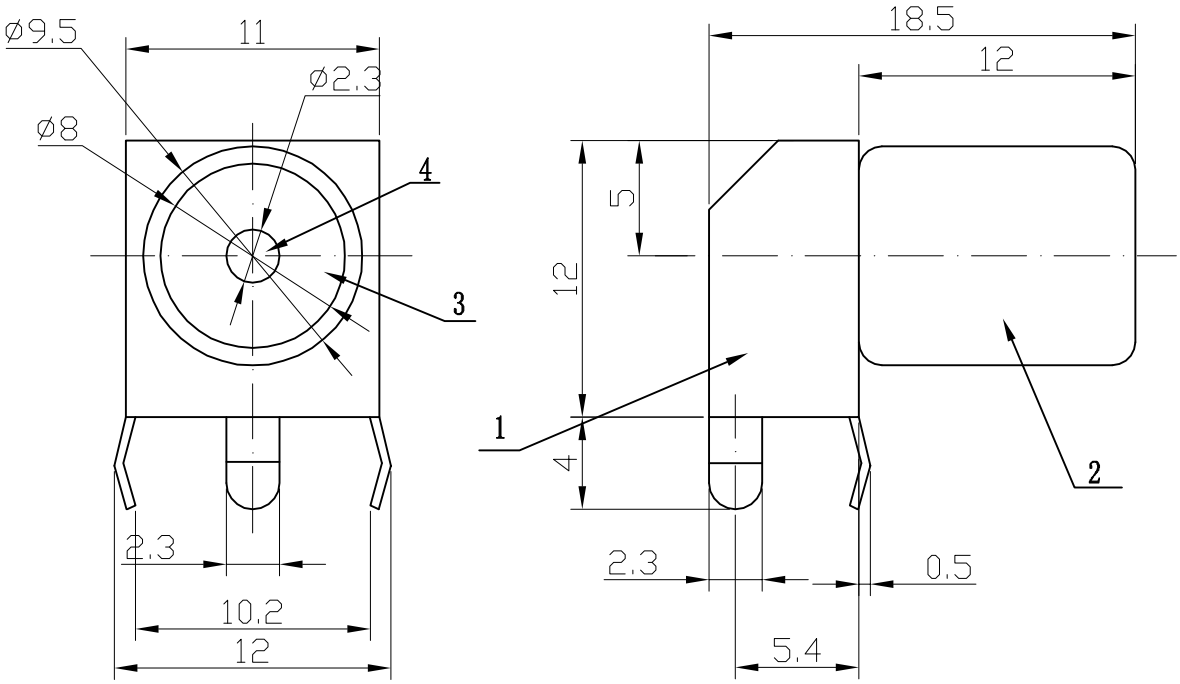

Dimensions of PC board holes

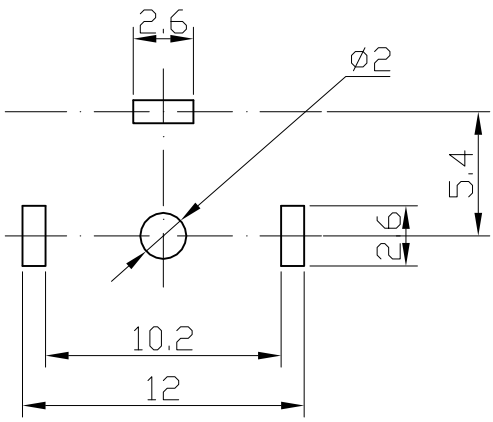

Unspecified tolerance is:

0-6±0.1mm

6-20±0.2mm

>20±0.3mm

No:	Name	QTY	Material	Coat Cladding Material
4	Contact needle	1	QSn6.5-0.1 t=0.3	D.Cu/Sn
3	Insulator	1	Insulator	——
2	Copper stalk	1	Barss H62	D.Cu/Sn
1	Iron is put up	1	Iron	D.Cu/Sn

Nurnber of old Base Map					
Nurnber of Base Map	Mark	Place Number	Changed document number	Signer	Date

IF-02P

Designer	Guang Qu	Standardize	Lixing Zhou	Design Mark	Weight	Proportion
Proofreader		Approved		A B		
Verifier						
Technology	Chang Lu Cai	Date	2008.3.6	1 piece together	the first piece	

Date	Signer

ZHEJIANG
ZUANBAO ELECTRONIC Co.,Ltd.

PDF 文件使用 "pdfFactory Pro" 试用版本创建 www.fineprint.com.cn