PRELIMINARY

NLT Technologies, Ltd.

TFT COLOR LCD MODULE

NLB150XG01L-01BD

38cm (15.0 Type)
XGA
LVDS interface (1port)

PRELIMINARY DATA SHEET

DOD-PP-1672 (1st edition)

All information is subject to change without notice. Please confirm the sales representative before starting to design your system.

INTRODUCTION

NLT does and will not assume any liability for infringement of patents, copyrights or other intellectual property rights of any third party arising out of or in connection with application of the products described herein except for that directly attributable to mechanisms and workmanship thereof. No license, express or implied, is granted under any patent, copyright or other intellectual property right of NLT.

Some electronic products would fail or malfunction at a certain rate. In spite of every effort to enhance reliability of products by NLT, the possibility of failures and malfunction might not be avoided entirely. To prevent the risks of damage to death, human bodily injury or other property arising out thereof or in connection therewith, each customer is required to take sufficient measures in its safety designs and plans including, but not limited to, redundant system, fire-containment and anti-failure.

The products are classified into three grades: **"Standard"**, **"Special"**, and **"Specific"**.
Each quality grade is designed for applications described below. Any customer who intends to use a product for application other than that of Standard is required to contact an NLT sales representative in advance.

The **Standard:** Applications as any failure, malfunction or error of the products are free from any damage to death, human bodily injury or other property (Products Safety Issue) and not related the safety of the public (Social Issues), like general electric devices.
Examples: Office equipment, audio and visual equipment, communication equipment, test and measurement equipment, personal electronic equipment, home electronic appliances, car navigation system (with no vehicle control functions), seat entertainment monitor for vehicles and airplanes, fish finder (except marine radar integrated type), PDA, etc.

The **Special:** Applications as any failure, malfunction or error of the products might directly cause any damage to death, human bodily injury or other property (Products Safety Issue) and the safety of the public (Social Issues) and required high level reliability by conventional wisdom.
Examples: Vehicle/train/ship control system, traffic signals system, traffic information control system, air traffic control system, surgery/operation equipment monitor, disaster/crime prevention system, etc.

The **Specific:** Applications as any failure, malfunction or error of the products might severe cause any damage to death, human bodily injury or other property (Products Safety Issue) and the safety of the public (Social Issues) and developed, designed and manufactured in accordance with the standards or quality assurance program designated by the customer who requires extremely high level reliability and quality.
Examples: Aerospace system (except seat entertainment monitor), nuclear control system, life support system, etc.

The quality grade of this product is the **"Standard"** unless otherwise specified in this document.

CONTENTS

1. OUTLINE

1.1 STRUCTURE AND PRINCIPLE

Color LCD module NLB150XG01L-01BD is composed of the amorphous silicon thin film transistor liquid crystal display (a-Si TFT LCD) panel structure with driver LSIs for driving the TFT (Thin Film Transistor) array, touch panel (T/P) and a backlight.

The a-Si TFT LCD panel structure is injected liquid crystal material into a narrow gap between the TFT array glass substrate and a color-filter glass substrate.

Color (Red, Green, Blue) data signals from a host system (e.g. signal generator, etc.) are modulated into best form for active matrix system by a signal processing board, and sent to the driver LSIs which drive the individual TFT arrays.

The TFT array as an electro-optical switch regulates the amount of transmitted light from the backlight assembly, when it is controlled by data signals. Color images are created by regulating the amount of transmitted light through the TFT array of red, green and blue dots.

1.2 APPLICATION

- For industrial use

1.3 FEATURES

- Projected capacitive touch panel (P-CAP T/P) attached
- Touch panel having cover glass
- High luminance
- High contrast
- LED backlight type
- LED driver Built-in
- LVDS interface
- Selectable 8bit or 6bit digital signals for data of RGB
- Replaceable lamp holder for backlight
- Fast response time
- Small foot print
- Selectable LVDS input map
- Wide viewing angle

2. GENERAL SPECIFICATIONS

Display area	304.128 (H) × 228.096 (V) mm
Diagonal size of display	38cm (15.0 inches)
Drive system	a-Si TFT active matrix
Display color	16,777,216 colors (At 8-bit input, FRC terminal= Low) 262,144 colors (At 6-bit input, FRC terminal= High or Open)
Pixel	1,024 (H) × 768 (V) pixels
Pixel arrangement	RGB (Red dot, Green dot, Blue dot) vertical stripe
Dot pitch	0.099 (H) × 0.297 (V) mm
Pixel pitch	0.297 (H) × 0.297 (V) mm
Module size	326.5 (W) × 253.5 (H) × (14.1) (D) mm (typ.)
Weight	TBD g (typ.)
Contrast ratio	TBD:1 (typ.)
Viewing angle	*At the contrast ratio ≥10:1* • Horizontal: Right side 80° (typ.), Left side 80° (typ.) • Vertical: Up side 80° (typ.), Down side 80° (typ.)
Designed viewing direction	• Viewing angle with optimum grayscale (γ≒2.2): Normal axis (perpendicular) • Viewing direction without image reversal: Up side (12 o'clock) • Viewing direction with contrast peak: Down side (6 o'clock)
Touch panel type	Projected capacitive (Recommended Touch panel controller board (Option) • Touch panel controller board: Type No.PTPW01/02/03)
Touch panel surface	Antiglare
Touch panel pencil-hardness	(2H) (min.) [by JIS K5600]
Touch panel cover glass	• Thickness: 0.7mm glass • Quality of material: non-alkyl glass
Touch panel bonding method	Perimeter-bonding (with air gap)
Color gamut	*At LCD panel center* 60% (typ.) [against NTSC color space]
Response time	*Ton+Toff (10%←→90%)* 8ms (typ.)
Luminance	*At the maximum luminance control* (350) cd/m^2 (typ.)
Signal system	LVDS 1port
Power supply voltage	LCD panel: 3.3V LED backlight: 12V
Backlight	LED Backlight type: (Replaceable part • Lamp holder set: Type No.:150LHS201)
Power consumption	*At the maximum luminance control, Checkered flag pattern* 7.1 W (typ.)

3. BLOCK DIAGRAM

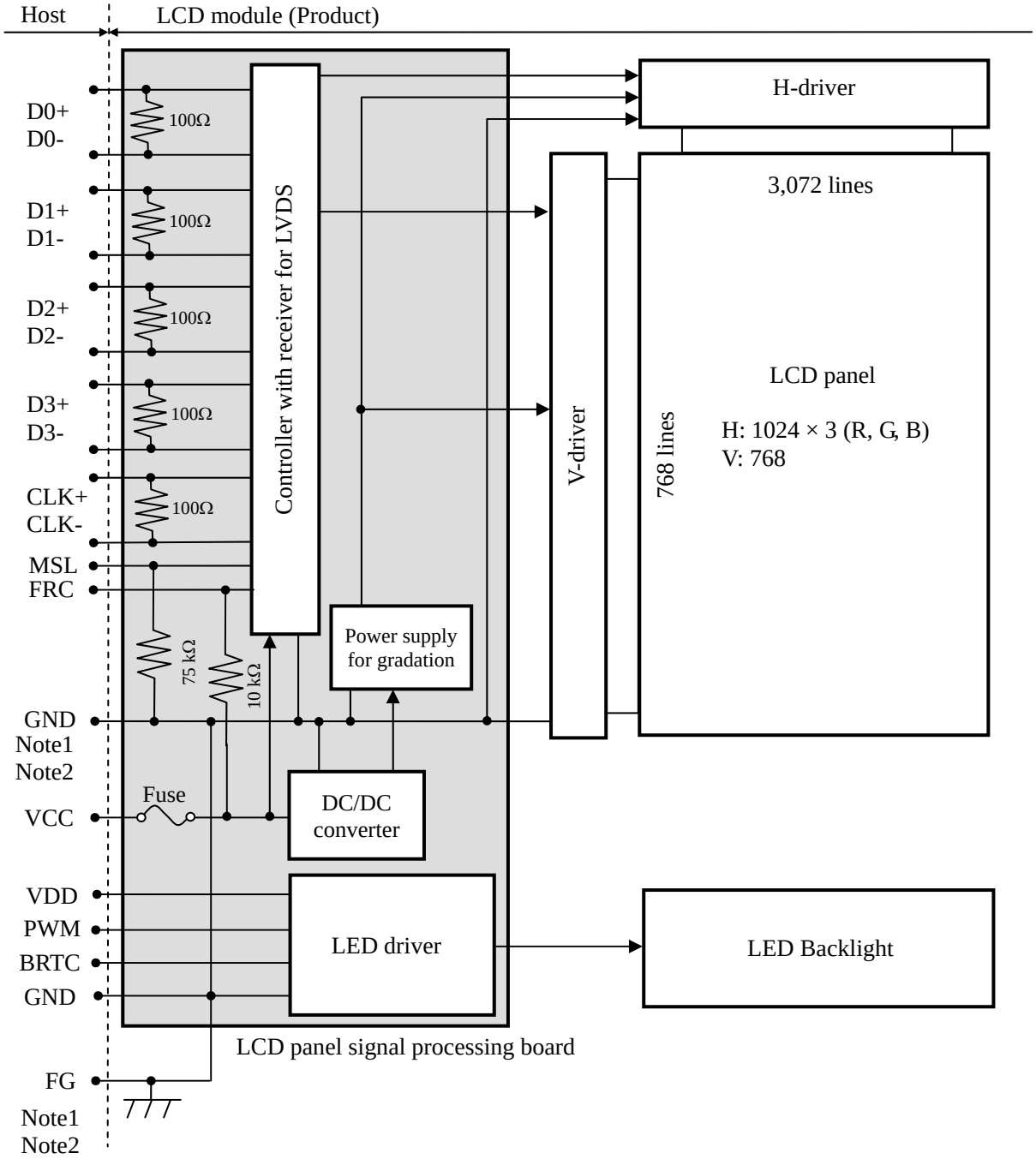

Note1: Relations between GND (Signal ground and LED driver ground) and FG (Frame ground) in the LCD module are as follows.

GND- FG	Connected

Note2: GND and FG must be connected to customer equipment's ground, and it is recommended that these grounds be connected together in customer equipment.

4. DETAILED SPECIFICATIONS

4.1 MECHANICAL SPECIFICATIONS

Parameter	Specification		Unit
Module size	326.5 ± 0.5 (W) × 253.5 ± 0.5 (H) × (14.1) (D)	Note1	mm
Display area	304.128 (H) × 228.096 (V)	Note1	mm
Weight	TBD (typ.), TBD (max.)		g

Note1: See "**8. OUTLINE DRAWINGS**".

4.2 ABSOLUTE MAXIMUM RATINGS

Parameter		Symbol	Rating	Unit	Remarks
Power supply voltage	LCD panel	VCC	-0.3 to +4.0	V	Ta= 25°C
	LED driver	VDD	-0.3 to +33.0		
Input voltage for signals	Display signals Note1	VD	-0.3 to +1.98	V	
	Function signals Note2	VF	-0.3 to +4.0		
	Function signal for LED driver	PWM	-0.3 to +5.5	V	
		BRTC	-0.3 to +5.5	V	
Storage temperature		Tst	-30 to +80	°C	-
Operating temperature	Front surface	TopF	-20 to +70	°C	Note3
	Rear surface	TopR	-20 to +70	°C	Note4
Relative humidity Note5		RH	≤ 90	%	Ta ≤ 40°C
			≤ 80	%	40 < Ta ≤ 50°C
Absolute humidity Note5		AH	≤ 70	g/m^3	Ta > 50°C

Note1: D0+/-, D1+/-, D2+/-, D3+/-, CLK+/-
Note2: MSL, DPS
Note3: Measured at Touch panel surface (including self-heat)
Note4: Measured at center of LCD module's rear shield surface (including self-heat)
Note5: No condensation

4.3 ELECTRICAL CHARACTERISTICS

4.3.1 LCD panel signal processing board

(Ta= 25°C)

Parameter		Symbol	min.	typ.	max.	Unit	Remarks
Power supply voltage		VCC	3.0	3.3	3.6	V	-
Power supply current		ICC	-	400 Note1	780 Note2	mA	at VCC= 3.3V
Permissible ripple voltage		VRP	-	-	300	mVp-p	for VCC
Differential input threshold voltage	High	VTH	-	-	+100	mV	at VCM= 1.25V Note3
	Low	VTL	-100	-	-	mV	
Terminating resistance		RT	-	100	-	Ω	-
Input voltage for MSL and FRC signals	High	VFH	1.65	-	VCC	V	-
	Low	VFL	0	-	0.40	V	
Input current for MSL and FRC signals	High	IFH	-	-	10	μA	-
	Low	IFL	-10	-	-	μA	

Note1: Checkered flag pattern [by EIAJ ED-2522]
Note2: Pattern for maximum current
Note3: Common mode voltage for LVDS receiver

4.3.2 Backlight lamp

(Ta= 25°C)

Parameter		Symbol	min.	typ.	max.	Unit	Remarks
Power supply voltage		VDD	10.8	12.0	12.6	V	Note1
Power supply current		IDD	-	480	650 Note2	mA	At the maximum luminance control.
Permissible ripple voltage		VRPD	-	-	200	mVp-p	for VDD Note3
Input voltage for PWM signal	High	VDFH1	1.2	-	5.5	V	-
	Low	VDFL1	-	-	0.35	V	
Input voltage for BRTC signal	High	VDFH2	1.5	-	5.5	V	-
	Low	VDFL2	0	-	0.8	V	
PWM frequency		f_{PWM}	200	-	20k	Hz	Note4, Note5
PWM duty ratio		DR_{PWM}	1	-	100	%	Note6, Note7
PWM pulse width		tPWH	5	-	-	μs	

Note1: When designing of the power supply, take the measures for the prevention of surge voltage.
Note2: This value excludes peak current such as overshoot current.
Note3: The power supply lines (VDD and GND) may have ripple voltage during luminance control of LED. There is the possibility that the ripple voltage produces acoustic noise and signal wave noise in audio circuit and so on. Put a capacitor between the power supply lines (VDD and GND) to reduce the noise if necessary.
Note4: A recommended f_{PWM} value is as follows.

$$f_{PWM} = \frac{2n-1}{4} \times fv$$

$$(n = \text{integer}, fv = \text{frame frequency of LCD module})$$

Note5: Depending on the frequency used, so noise may appear on the screen, please conduct a thorough evaluation.
Note6: While the BRTC signal is high, do not set the tPWH (PWM pulse width) is less than 5μs. It may cause abnormal working of the backlight. In this case, turn the backlight off and then on again by BRTC signal.
Note7: Regardless of the PWM frequency, both PWM duty cycle and PWM pulse width must be always more than the minimum values.

4.3.3 Power supply voltage ripple

This product works if the ripple voltage levels are over the permissible values as the following table, but there might be noise on the display image.

Power supply voltage		Ripple voltage Note1 (Measure at input terminal of power supply)	Unit
VCC	3.3V	≤ 100	mVp-p

Note1: The permissible ripple voltage includes spike noise.

4.3.4 Fuse

Parameter	Fuse		Rating	Fusing current	Remarks
	Type	Supplier			
VCC	FCC16152AB	KAMAYA ELECTRIC Co., Ltd.	1.5A 36V	3.0A	Note1
VDD	FCC16202AB	KAMAYA ELECTRIC Co., Ltd.	2.0A 36V	4.0A	

Note1: The power supply's rated current must be more than the fusing current. If it is less than the fusing current, the fuse may not blow in a short time, and then nasty smell, smoke and so on may occur.

4.4 Touch panel specification

(Ta= 25°C)

Parameter		Symbol	min.	typ.	max.	Unit	Remarks
Accuracy	Center	Acrc	-	-	(1.5)	mm	Note1
	Boarder	Acrb	-	-	(2.5)	mm	Note1
Number of touch		NUM	1	-	16	Point	-
Scan speed	Active	Sspd A	-	(80)	-	Hz	-
	Idle	Sspd I		(30)		Hz	-
Resolution	X	-	-	-	4,096	-	Note2
	Y	-	-	-	4,096	-	Note2

Note1: Input method is ϕ8mm conductive stylus
Note2: Using the Touch panel controller board, which is a option parts.
Note3: See "**8. OUTLINE DRAWINGS**".

4.5 POWER SUPPLY VOLTAGE SEQUENCE

4.5.1 LCD panel signal processing board

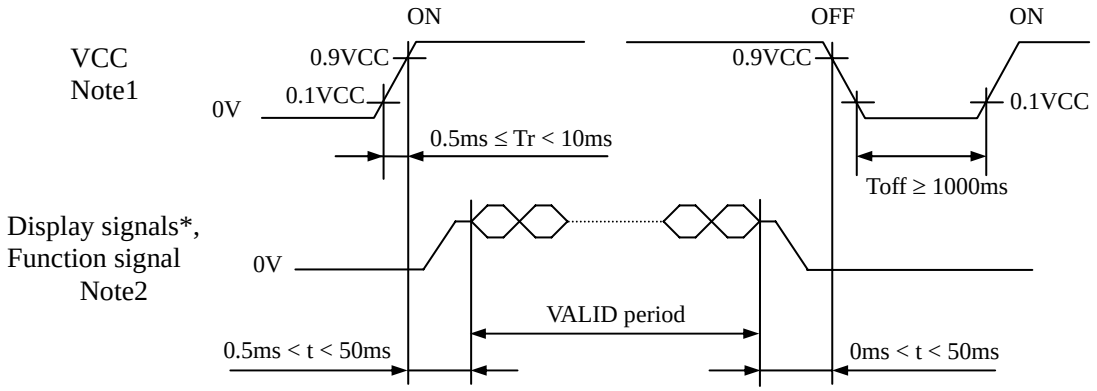

* These signals should be measured at the terminal of 100Ω resistance.

Note1: If there is a voltage variation (voltage drop) at the rising edge of VCC below 3.0V, there is a possibility that a product does not work due to a protection circuit.

Note2: Display signals (D0+/-, D1+/-, D2+/-, D3+/-, CLK+/-) and function signals (MSL, DPS) must be set to Low or High impedance, except the VALID period (See above sequence diagram), in order to avoid the circuitry damage.
If some of display and function signals of this product are cut while this product is working, even if the signal input to it once again, it might not work normally. If a customer stops the display and function signals, VCC also must be shut down.

4.5.2 LED driver board

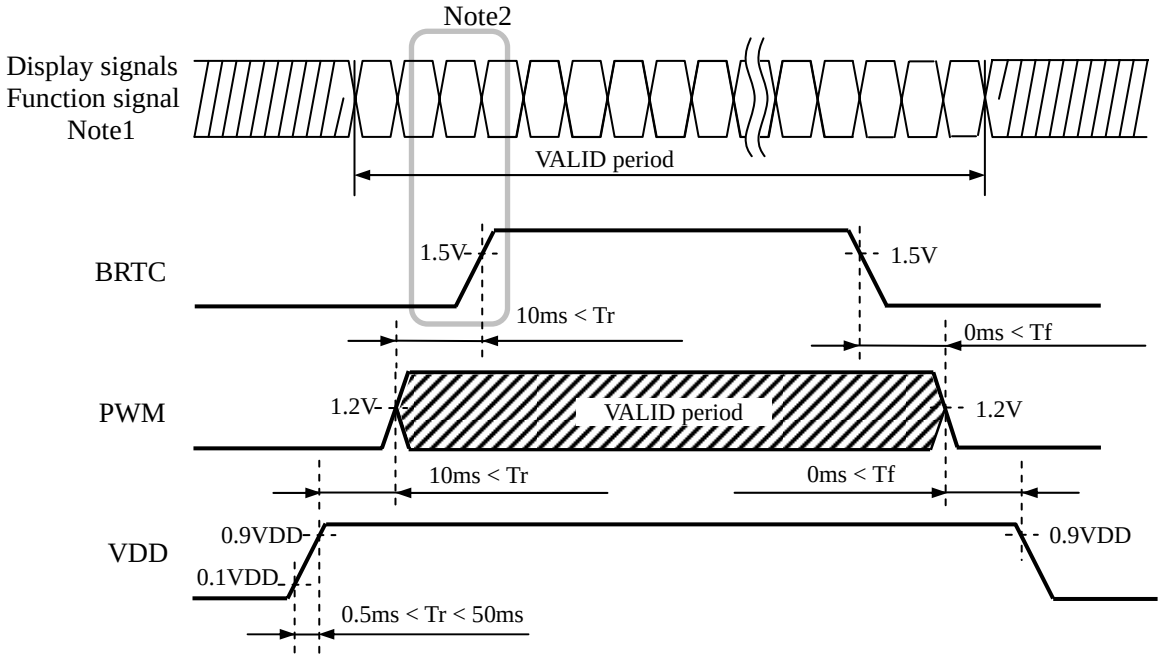

Note1: These are the display and function signals for LCD panel signal processing board.

Note2: The backlight should be turned on within the valid period of display and function signals, in order to avoid unstable data display.

4.6 CONNECTIONS AND FUNCTIONS FOR INTERFACE PINS

4.6.1 LCD panel signal processing board

CN1 socket (LCD module side): 185083-20121 (P-TWO ELECTRIC TECHNOLOGY CO., LTD.)
Adaptable plug: DF14-20S-1.25C (Hirose Electric Co., Ltd. (HRS))

Pin No.	Symbol	Signal	Input data signal: 8bit		Input data signal: 6bit	Remarks
			MAP A	MAP B		
1	VCC	Power supply	Power supply			Note2
2	VCC					
3	GND	Ground	Ground			Note2
4	GND					
5	D0-	Pixel data	R2-R7,G2	R0-R5,G0		Note1
6	D0+					
7	GND	Ground	Ground			Note2
8	D1-	Pixel data	G3-G7,B2-B3	G1-G5,B0-B1		Note1
9	D1+					
10	GND	Ground	Ground			Note2
11	D2-	Pixel data	B4-B7,DE	B2-B5,DE		Note1
12	D2+					
13	GND	Ground	Ground			Note2
14	CLK-	Pixel clock	Pixel clock			Note1
15	CLK+					
16	GND	Ground	Ground			Note2
17	D3- / GND	Pixel data / Ground	R0-R1, G0-G1, B0-B1	R6-R7, G6-G7, B6-B7	Ground	Note1
18	D3+ / GND					
19	MSL	Selection of LVDS Input data map	High	Low or Open	High	Note3, Note4
20	FRC	Selection of the number of colors	Low		High or Open	-

Note1: Twist pair wires with 100Ω (Characteristic impedance) should be used between LCD panel signal processing board and LVDS transmitter.
Note2: All GND and VCC terminals should be used without any non-connected lines.
Note3: See "**4.6.5 Connection between receiver and transmitter for LVDS**".
Note4: See "**4.7 DISPLAY COLORS AND INPUT DATA SIGNALS**".

4.6.2 Backlight lamp

CN2 socket (LCD module side): MSB24038P5 (Produced by STM) or equivalent.
Adaptable plug: P24038P5 (Produced by STM)

Pin No.	Symbol	Signal	Remarks
1	VDD	Power supply	-
2	GND	Ground	-
3	BRTC	Back light ON/OFF control	High- On / Low- Off
4	PWM	Luminance control	PWM Dimming
5	N. C.	Non connection	Keep this pin Open.

4.6.3 Touch panel

CN3 (FPC)
Adaptable socket: FH28-40S-0.5SH(05) (Hirose Electric Co., Ltd.(HRS))

Pin No.	Symbol	Signal	Pin No.	Symbol	Signal
1	GND	Ground Note1	21	X13	X line terminal
2	GND	Ground Note1	22	X12	X line terminal
3	X31	X line terminal	23	X11	X line terminal
4	X30	X line terminal	24	X10	X line terminal
5	X29	X line terminal	25	X9	X line terminal
6	X28	X line terminal	26	X8	X line terminal
7	X27	X line terminal	27	X7	X line terminal
8	X26	X line terminal	28	X6	X line terminal
9	X25	X line terminal	29	X5	X line terminal
10	X24	X line terminal	30	X4	X line terminal
11	X23	X line terminal	31	X3	X line terminal
12	X22	X line terminal	32	X2	X line terminal
13	X21	X line terminal	33	X1	X line terminal
14	X20	X line terminal	34	X0	X line terminal
15	X19	X line terminal	35	GND	Ground Note1
16	X18	X line terminal	36	GND	Ground Note1
17	X17	X line terminal	37	N. C.	(Keep this pin open)
18	X16	X line terminal	38	N. C.	(Keep this pin open)
19	X15	X line terminal	39	N. C.	(Keep this pin open)
20	X14	X line terminal	40	N. C.	(Keep this pin open)

Note1: All GND terminals should be used without any non-connected lines.

CN4 (FPC)
Adaptable socket: FH28-60S-0.5SH(05) (Hirose Electric Co., Ltd.(HRS))

Pin No.	Symbol	Signal	Pin No.	Symbol	Signal
1	GND	Ground Note1	31	Y28	Y line terminal
2	GND	Ground Note1	32	Y29	Y line terminal
3	Y0	Y line terminal	33	Y30	Y line terminal
4	Y1	Y line terminal	34	Y31	Y line terminal
5	Y2	Y line terminal	35	Y32	Y line terminal
6	Y3	Y line terminal	36	Y33	Y line terminal
7	Y4	Y line terminal	37	Y34	Y line terminal
8	Y5	Y line terminal	38	Y35	Y line terminal
9	Y6	Y line terminal	39	Y36	Y line terminal
10	Y7	Y line terminal	40	Y37	Y line terminal
11	Y8	Y line terminal	41	Y38	Y line terminal
12	Y9	Y line terminal	42	Y39	Y line terminal
13	Y10	Y line terminal	43	Y40	Y line terminal
14	Y11	Y line terminal	44	Y41	Y line terminal
15	Y12	Y line terminal	45	Y42	Y line terminal
16	Y13	Y line terminal	46	Y43	Y line terminal
17	Y14	Y line terminal	47	Y44	Y line terminal
18	Y15	Y line terminal	48	Y45	Y line terminal
19	Y16	Y line terminal	49	Y46	Y line terminal
20	Y17	Y line terminal	50	Y47	Y line terminal
21	Y18	Y line terminal	51	Y48	Y line terminal
22	Y19	Y line terminal	52	Y49	Y line terminal
23	Y20	Y line terminal	53	Y50	Y line terminal
24	Y21	Y line terminal	54	Y51	Y line terminal
25	Y22	Y line terminal	55	GND	Ground Note1
26	Y23	Y line terminal	56	GND	Ground Note1
27	Y24	Y line terminal	57	N. C.	(Keep this pin open)
28	Y25	Y line terminal	58	N. C.	(Keep this pin open)
29	Y26	Y line terminal	59	N. C.	(Keep this pin open)
30	Y27	Y line terminal	60	N. C.	(Keep this pin open)

Note1: All GND terminals should be used without any non-connected lines.

4.6.4 Positions of socket

Rear side

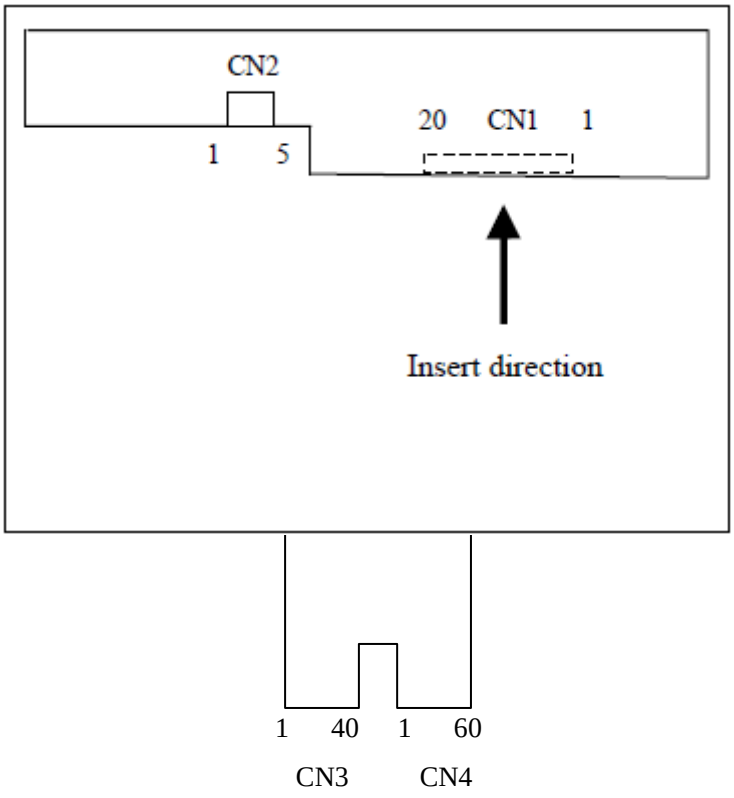

4.6.5 Connection between receiver and transmitter for LVDS
(1) LVDS Input data signal: 8bit, MAP A (MSL: High, FRC: Low)

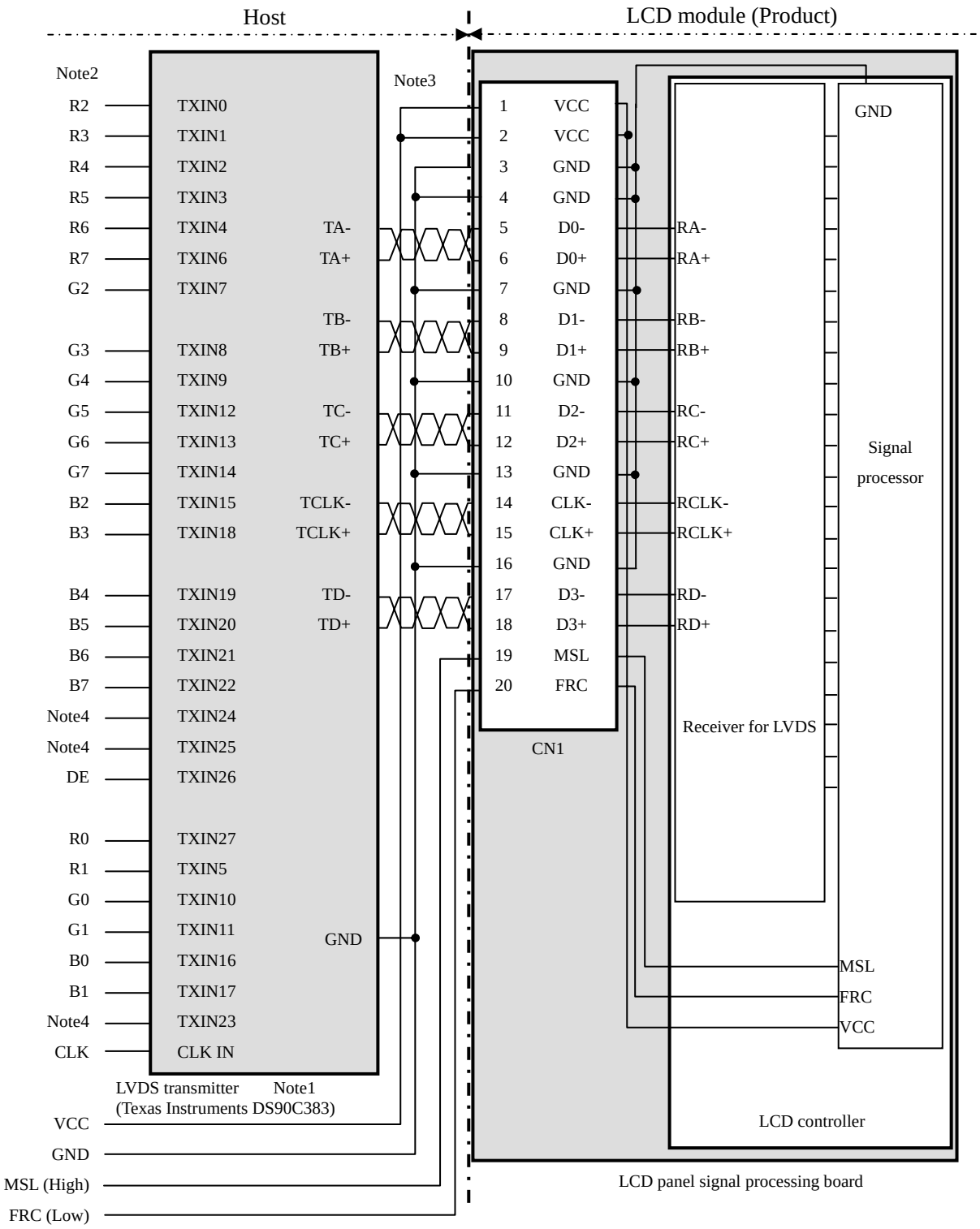

Note1: Recommended transmitter. See the data sheet for DS90C383 (Texas Instruments).
Note2: LSB (Least Significant Bit) - R0, G0, B0 MSB (Most Significant Bit) - R7, G7, B7
Note3: Twist pair wires with 100Ω (Characteristic impedance) should be used between LCD panel signal processing board and LVDS transmitter.
Note4: Input signals to TXIN23, TXIN24 and TXIN25 are not used inside the product, but do not keep TXIN23, TXIN24 and TXIN25 open to avoid noise problem.

(2) LVDS Input data signal: 8bit, MAP B (MSL: Low or Open, FRC: Low)

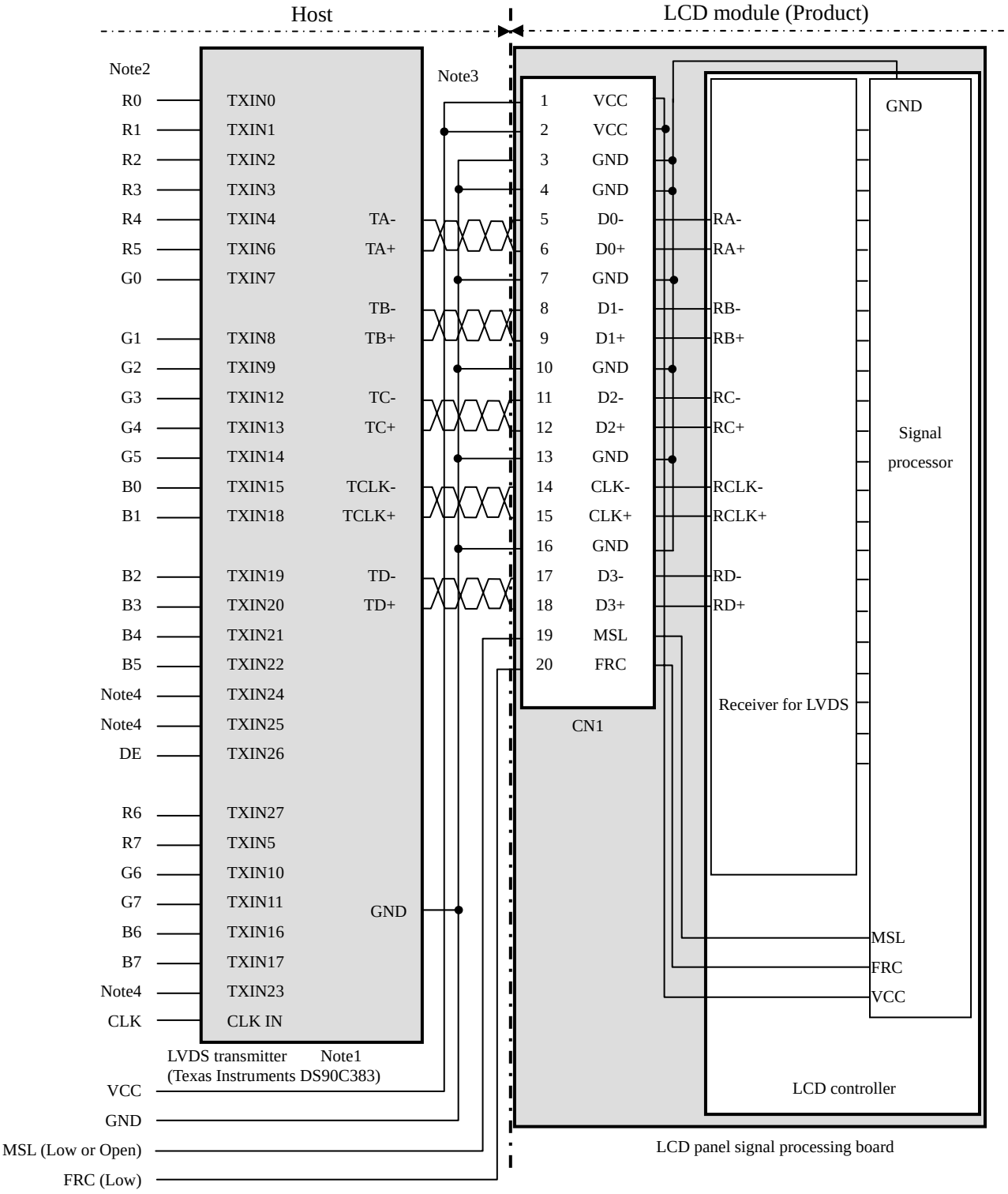

Note1: Recommended transmitter. See the data sheet for DS90C383 (Texas Instruments).
Note2: LSB (Least Significant Bit) - R0, G0, B0 MSB (Most Significant Bit) - R7, G7, B7
Note3: Twist pair wires with 100Ω (Characteristic impedance) should be used between LCD panel signal processing board and LVDS transmitter.
Note4: Input signals to TXIN23, TXIN24 and TXIN25 are not used inside the product, but do not keep TXIN23, TXIN24 and TXIN25 open to avoid noise problem.

(3) LVDS Input data signal: 6bit (MSL: High, FRC: High or Open)

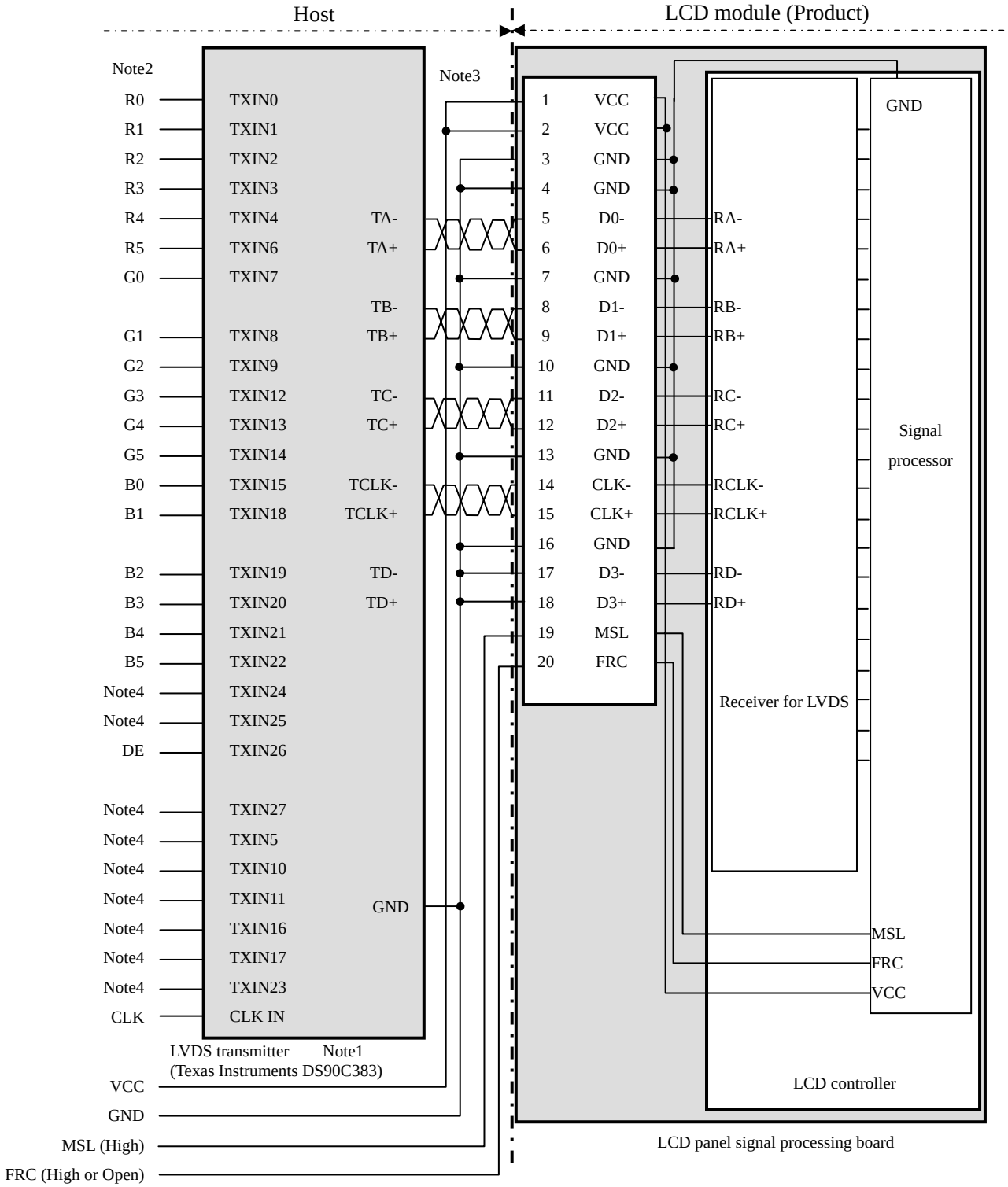

Note1: Recommended transmitter. See the data sheet for DS90C383 (Texas Instruments).
Note2: LSB (Least Significant Bit) - R0, G0, B0 MSB (Most Significant Bit) - R5, G5, B5
Note3: Twist pair wires with 100Ω (Characteristic impedance) should be used between LCD panel signal processing board and LVDS transmitter.
Note4: Input signals to TXIN24, TXIN25, TXIN27, TXIN5, TXIN10, TXIN11, TXIN16, TXIN17 and TXIN23 are not used inside the product, but do not keep these terminals open to avoid noise problem.

4.6.6 Input data mapping

(1) LVDS Input data signal: 8bit, MAP A (MSL: High, FRC: Low)

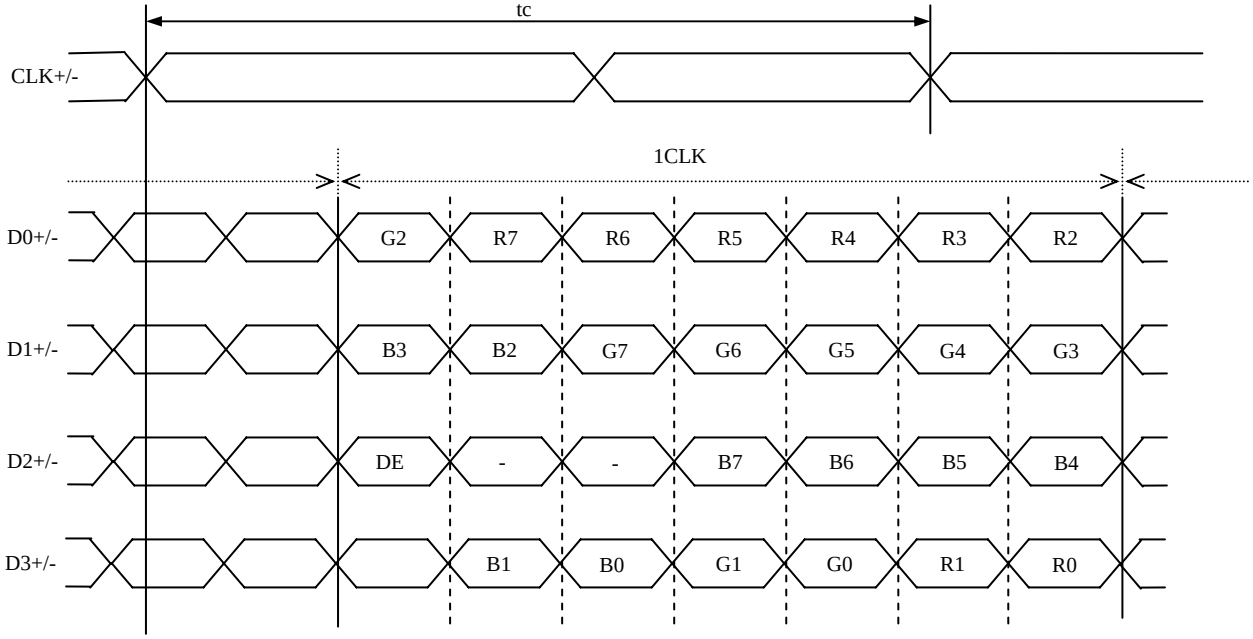

(2) LVDS Input data signal: 8bit, MAP B (MSL: Low or Open, FRC: Low)

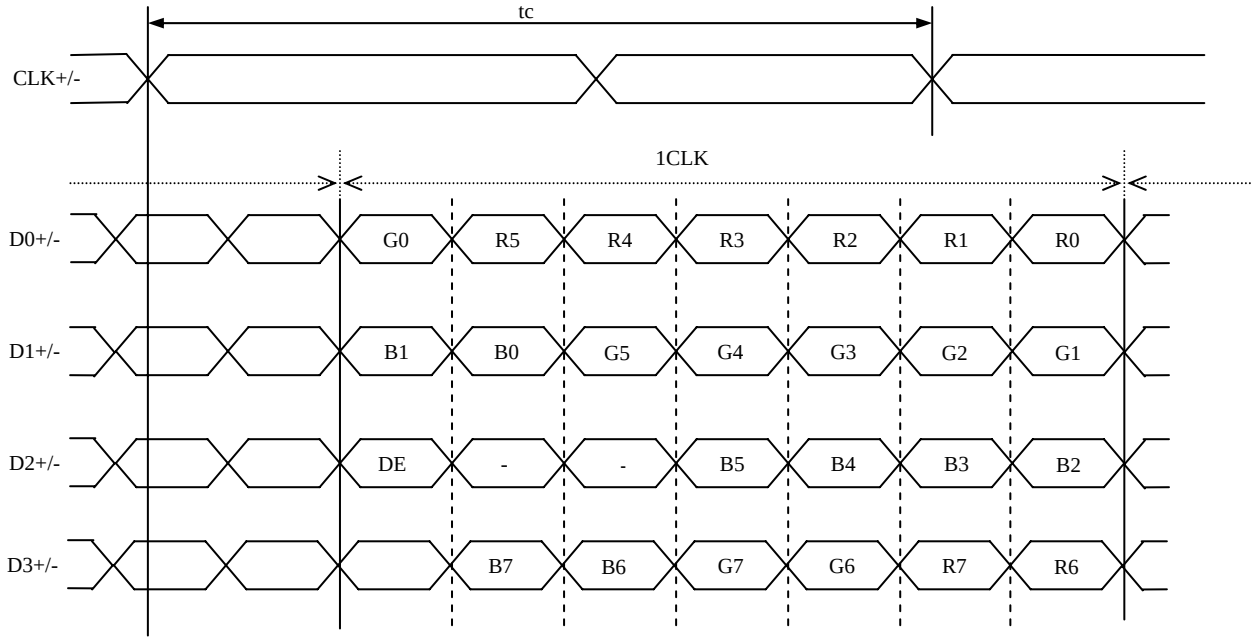

(3) LVDS Input data signal: 6bit (MSL: High, FRC: High or Open)

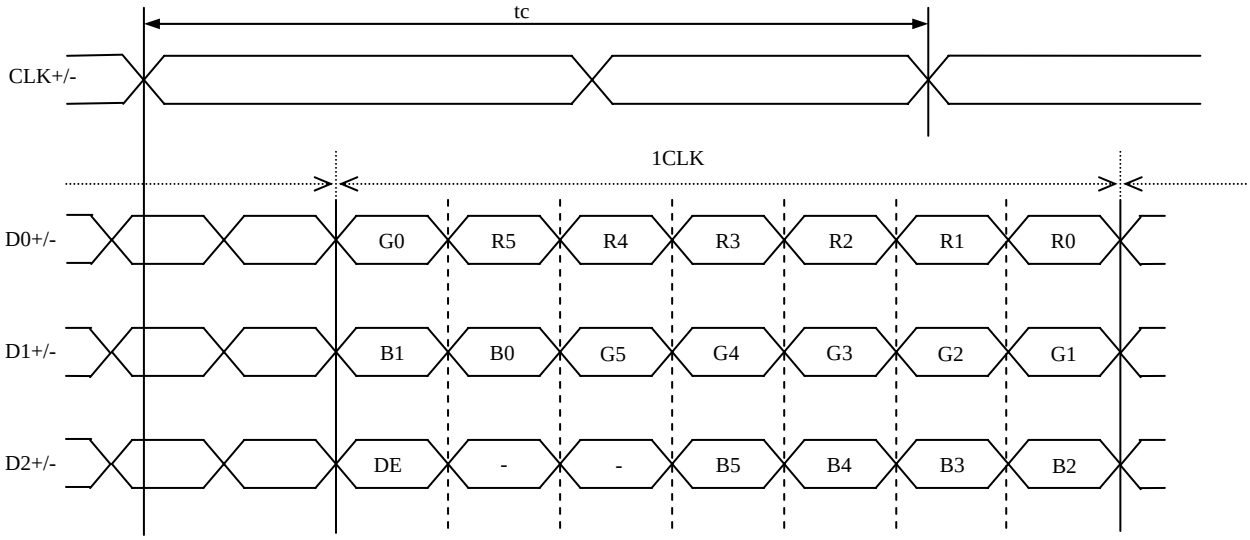

4.7 DISPLAY COLORS AND INPUT DATA SIGNALS

4.7.1 Combinations of input data signals, FRC and MSL signal

This product can display 16,777,216 colors equivalent with 256 gray scales and 262,144 colors with 64 gray scales by combination of input data signals, FRC and MSL signal. See the following table.

Combination	Input data signals	Input Data mapping	CN1- Pin No.17 and 18	FRC terminal	MSL terminal	Display colors	Remarks
①	8 bit	MAP A	D3+/-	Low	High	16,777,216	Note1
②	8 bit	MAP B	D3+/-	Low	Low or Open	16,777,216	Note1
③	6 bit	-	GND	High or Open	High	262,144	Note2

Note1: See "**4.7.2 16,777,216 colors**".
Note2: See "**4.7.3 262,144 colors**".

4.7.2 16,777,216 colors

This product can display equivalent of 16,777,216 colors in 256 gray scales by combination ① or ②.
(See "**4.7.1 Combinations of input data signals, FRC and MSL signal**".)
Also the relation between display colors and input data signals is as the following table.

Display colors		Data signal (0: Low level, 1: High level)																							
		R7	R6	R5	R4	R3	R2	R1	R0	G7	G6	G5	G4	G3	G2	G1	G0	B7	B6	B5	B4	B3	B2	B1	B0
Basic Colors	Black	0	0	0	0	0	0	0	0	0	0	0	0	0	0	0	0	0	0	0	0	0	0	0	0
	Blue	0	0	0	0	0	0	0	0	0	0	0	0	0	0	0	0	1	1	1	1	1	1	1	1
	Red	1	1	1	1	1	1	1	1	0	0	0	0	0	0	0	0	0	0	0	0	0	0	0	0
	Magenta	1	1	1	1	1	1	1	1	0	0	0	0	0	0	0	0	1	1	1	1	1	1	1	1
	Green	0	0	0	0	0	0	0	0	1	1	1	1	1	1	1	1	0	0	0	0	0	0	0	0
	Cyan	0	0	0	0	0	0	0	0	1	1	1	1	1	1	1	1	1	1	1	1	1	1	1	1
	Yellow	1	1	1	1	1	1	1	1	1	1	1	1	1	1	1	1	0	0	0	0	0	0	0	0
	White	1	1	1	1	1	1	1	1	1	1	1	1	1	1	1	1	1	1	1	1	1	1	1	1
Red gray scale	Black	0	0	0	0	0	0	0	0	0	0	0	0	0	0	0	0	0	0	0	0	0	0	0	0
		0	0	0	0	0	0	0	1	0	0	0	0	0	0	0	0	0	0	0	0	0	0	0	0
	dark	0	0	0	0	0	0	1	0	0	0	0	0	0	0	0	0	0	0	0	0	0	0	0	0
	↑					:								:								:			
	↓					:								:								:			
	bright	1	1	1	1	1	1	0	1	0	0	0	0	0	0	0	0	0	0	0	0	0	0	0	0
		1	1	1	1	1	1	1	0	0	0	0	0	0	0	0	0	0	0	0	0	0	0	0	0
	Red	1	1	1	1	1	1	1	1	0	0	0	0	0	0	0	0	0	0	0	0	0	0	0	0
Green gray scale	Black	0	0	0	0	0	0	0	0	0	0	0	0	0	0	0	0	0	0	0	0	0	0	0	0
		0	0	0	0	0	0	0	0	0	0	0	0	0	0	0	1	0	0	0	0	0	0	0	0
	dark	0	0	0	0	0	0	0	0	0	0	0	0	0	0	1	0	0	0	0	0	0	0	0	0
	↑					:								:								:			
	↓					:								:								:			
	bright	0	0	0	0	0	0	0	0	1	1	1	1	1	1	0	1	0	0	0	0	0	0	0	0
		0	0	0	0	0	0	0	0	1	1	1	1	1	1	1	0	0	0	0	0	0	0	0	0
	Green	0	0	0	0	0	0	0	0	1	1	1	1	1	1	1	1	0	0	0	0	0	0	0	0
Blue gray scale	Black	0	0	0	0	0	0	0	0	0	0	0	0	0	0	0	0	0	0	0	0	0	0	0	0
		0	0	0	0	0	0	0	0	0	0	0	0	0	0	0	0	0	0	0	0	0	0	0	1
	dark	0	0	0	0	0	0	0	0	0	0	0	0	0	0	0	0	0	0	0	0	0	0	1	0
	↑					:								:								:			
	↓					:								:								:			
	bright	0	0	0	0	0	0	0	0	0	0	0	0	0	0	0	0	1	1	1	1	1	1	0	1
		0	0	0	0	0	0	0	0	0	0	0	0	0	0	0	0	1	1	1	1	1	1	1	0
	Blue	0	0	0	0	0	0	0	0	0	0	0	0	0	0	0	0	1	1	1	1	1	1	1	1

4.7.3 262,144 colors

This product can display 262,144 colors with 64 gray scales by combination ③.
(See "**4.7.1 Combinations of input data signals, FRC and MSL signal**".)
Also the relation between display colors and input data signals is as follows.

Display colors		Data signal (0: Low level, 1: High level)																	
		R5	R4	R3	R2	R1	R0	G5	G4	G3	G2	G1	G0	B5	B4	B3	B2	B1	B0
Basic colors	Black	0	0	0	0	0	0	0	0	0	0	0	0	0	0	0	0	0	0
	Blue	0	0	0	0	0	0	0	0	0	0	0	0	1	1	1	1	1	1
	Red	1	1	1	1	1	1	0	0	0	0	0	0	0	0	0	0	0	0
	Magenta	1	1	1	1	1	1	0	0	0	0	0	0	1	1	1	1	1	1
	Green	0	0	0	0	0	0	1	1	1	1	1	1	0	0	0	0	0	0
	Cyan	0	0	0	0	0	0	1	1	1	1	1	1	1	1	1	1	1	1
	Yellow	1	1	1	1	1	1	1	1	1	1	1	1	0	0	0	0	0	0
	White	1	1	1	1	1	1	1	1	1	1	1	1	1	1	1	1	1	1
Red gray scale	Black	0	0	0	0	0	0	0	0	0	0	0	0	0	0	0	0	0	0
		0	0	0	0	0	1	0	0	0	0	0	0	0	0	0	0	0	0
	dark	0	0	0	0	1	0	0	0	0	0	0	0	0	0	0	0	0	0
	↑				:						:						:		
	↓				:						:						:		
	bright	1	1	1	1	0	1	0	0	0	0	0	0	0	0	0	0	0	0
		1	1	1	1	1	0	0	0	0	0	0	0	0	0	0	0	0	0
	Red	1	1	1	1	1	1	0	0	0	0	0	0	0	0	0	0	0	0
Green gray scale	Black	0	0	0	0	0	0	0	0	0	0	0	0	0	0	0	0	0	0
		0	0	0	0	0	0	0	0	0	0	0	1	0	0	0	0	0	0
	dark	0	0	0	0	0	0	0	0	0	0	1	0	0	0	0	0	0	0
	↑				:						:						:		
	↓				:						:						:		
	bright	0	0	0	0	0	0	1	1	1	1	0	1	0	0	0	0	0	0
		0	0	0	0	0	0	1	1	1	1	1	0	0	0	0	0	0	0
	Green	0	0	0	0	0	0	1	1	1	1	1	1	0	0	0	0	0	0
Blue gray scale	Black	0	0	0	0	0	0	0	0	0	0	0	0	0	0	0	0	0	0
		0	0	0	0	0	0	0	0	0	0	0	0	0	0	0	0	0	1
	dark	0	0	0	0	0	0	0	0	0	0	0	0	0	0	0	0	1	0
	↑				:						:						:		
	↓				:						:						:		
	bright	0	0	0	0	0	0	0	0	0	0	0	0	1	1	1	1	0	1
		0	0	0	0	0	0	0	0	0	0	0	0	1	1	1	1	1	0
	Blue	0	0	0	0	0	0	0	0	0	0	0	0	1	1	1	1	1	1

4.8 DISPLAY POSITIONS

The following table is the coordinates per pixel.

C (0, 0)

R	G	B

C(0, 0)	C(1, 0)	• • •	C(X, 0)	• • •	C(1022, 0)	C(1023, 0)
C(0, 1)	C(1, 1)	• • •	C(X, 1)	• • •	C(1022, 1)	C(1023, 1)
• • •	• • •	• • • • •	• • •	• • • • •	• • •	• • • • •
C(0, Y)	C(1, Y)	• • •	C(X, Y)	• • •	C(1022, Y)	C(1023, Y)
• • •	• • •	• • • • •	• • •	• • • • •	• • •	• • •
C(0, 766)	C(1, 766)	• • •	C(X, 766)	• • •	C(1022, 766)	C(1023, 766)
C(0, 767)	C(1, 767)	• • •	C(X, 767)	• • •	C(1022, 767)	C(1023, 767)

4.9 INPUT SIGNAL TIMINGS

4.9.1 Outline of input signal timings

• Horizontal signal

Note1

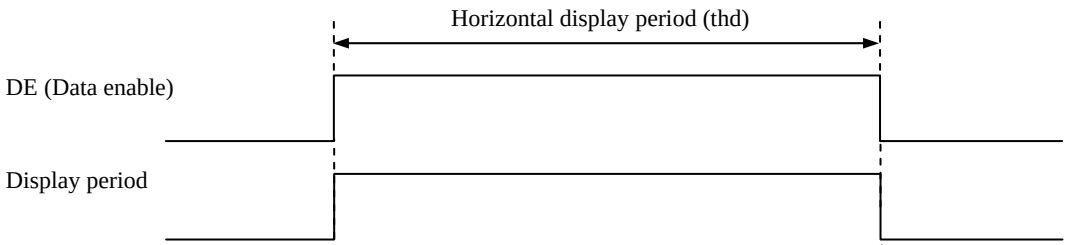

• Vertical signal

Note1

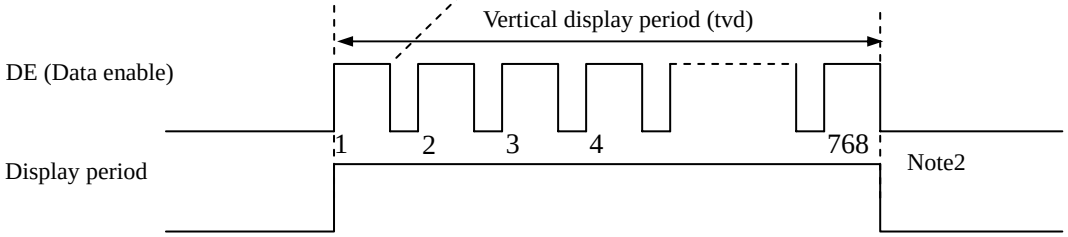

Note1: This diagram indicates virtual signal for set up to timing.
Note2: See "**4.9.3 Input signal timing chart**" for the pulse number.

4.9.2 Timing characteristics

(Note1, Note2, Note3)

Parameter			Symbol	min.	typ.	max.	Unit	Remarks
CLK	Frequency		1/tc	50.0	65.0	81.25	MHz	15.385 ns (typ.)
	Duty		-	-			-	-
	Rise time, Fall time		-				ns	
DATA	CLK-DATA	Setup time	-	-			ns	-
		Hold time	-				ns	
	Rise time, Fall time		-				ns	
DE	Horizontal	Cycle	th	16.542	20.676	26.88	μs	48.363 kHz (typ.)
				1,100	1,344	1,800	CLK	
		Display period	thd	1,024			CLK	-
	Vertical (One frame)	Cycle	tv	13.34	16.666	20.0	ms	60.0 Hz (typ.)
				780	806	1,334	H	
		Display period	tvd	768			H	-
	CLK-DE	Setup time	-	-			ns	-
		Hold time	-				ns	
	Rise time, Fall time		-				ns	

Note1: Definition of parameters is as follows.
tc= 1CLK, th= 1H
Note2: See the data sheet of LVDS transmitter.
Note3: Vertical cycle (tv) should be specified in integral multiple of Horizontal cycle (th).

4.9.3 Input signal timing chart

Horizontal timing

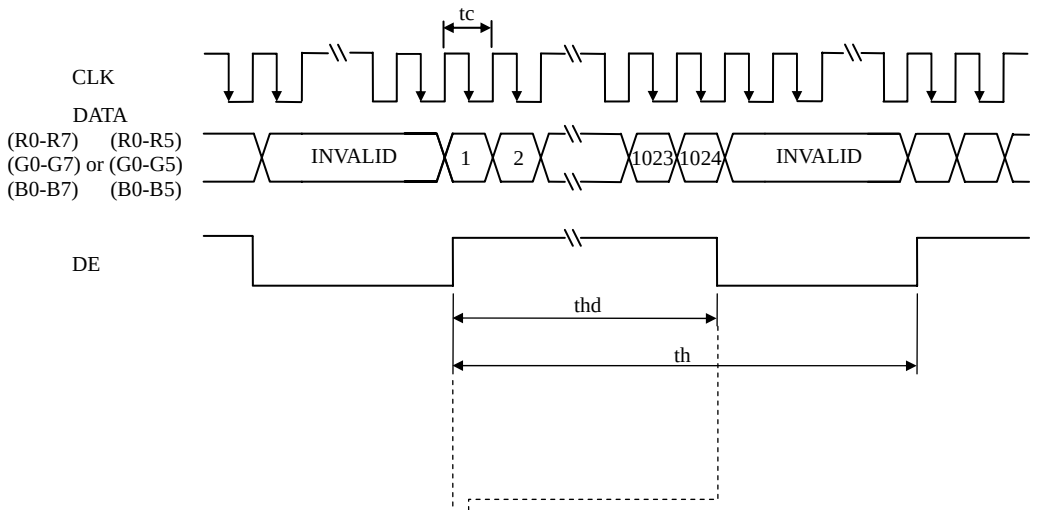

Vertical timing

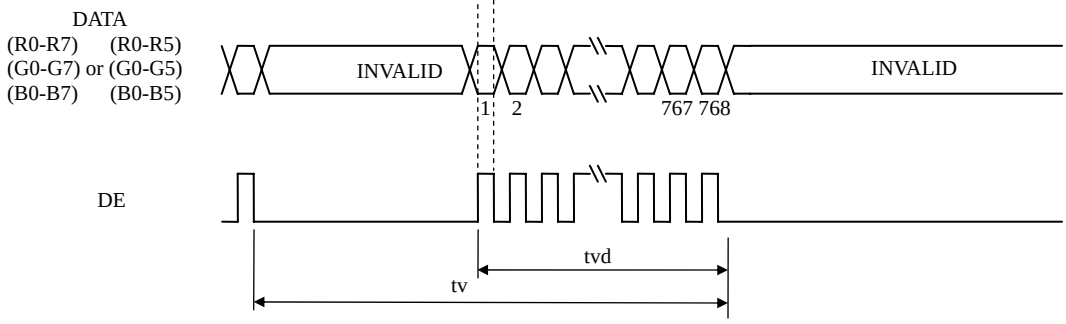

4.10 OPTICS

4.10.1 Optical characteristics

(Note1, Note2)

Parameter		Condition	Symbol	min.	typ.	max.	Unit	Measuring instrument	Remarks
Luminance		White at center θR= 0°, θL= 0°, θU= 0°, θD= 0°	L	TBD	(350)	-	cd/m^2	BM-5A	-
Contrast ratio		White/Black at center θR= 0°, θL= 0°, θU= 0°, θD= 0°	CR	TBD	TBD	-	-	BM-5A	Note3
Luminance uniformity		White θR= 0°, θL= 0°, θU= 0°, θD= 0°	LU	-	1.25	1.33	-	BM-5A	Note4
Chromaticity	White	**x** coordinate	Wx	0.263	0.313	0.363	-	SR-3	Note5
		y coordinate	Wy	0.279	0.329	0.379	-		
	Red	**x** coordinate	Rx	-	0.631	-	-		
		y coordinate	Ry	-	0.357	-	-		
	Green	**x** coordinate	Gx	-	0.344	-	-		
		y coordinate	Gy	-	0.608	-	-		
	Blue	**x** coordinate	Bx	-	0.153	-	-		
		y coordinate	By	-	0.089	-	-		
Color gamut		θR= 0°, θL= 0°, θU= 0°, θD= 0° at center, against NTSC color space	C	55	60	-	%		
Response time		White to Black	Ton	-	3	5	ms	BM-5A-10000	Note6
		Black to White	Toff	-	5	8	ms		Note7
Viewing angle	Right	θU= 0°, θD= 0°, CR≥ 10	θR	70	80	-	°	EZ Contrast	Note8
	Left	θU= 0°, θD= 0°, CR≥ 10	θL	70	80	-	°		
	Up	θR= 0°, θL= 0°, CR≥ 10	θU	70	80	-	°		
	Down	θR= 0°, θL= 0°, CR≥ 10	θD	70	80	-	°		

Note1: These are initial characteristics.
Note2: Measurement conditions are as follows.
Ta= 25°C, VCC= 3.3V, VDD= 12.0V, PWM: Duty 100%,
Display mode: XGA, Horizontal cycle= 1/48.363kHz, Vertical cycle= 1/60.0Hz,
FRC=Low (8bit mode)

Optical characteristics are measured at luminance saturation 20minutes after the product works, in the dark room. Also measurement methods are as follows.

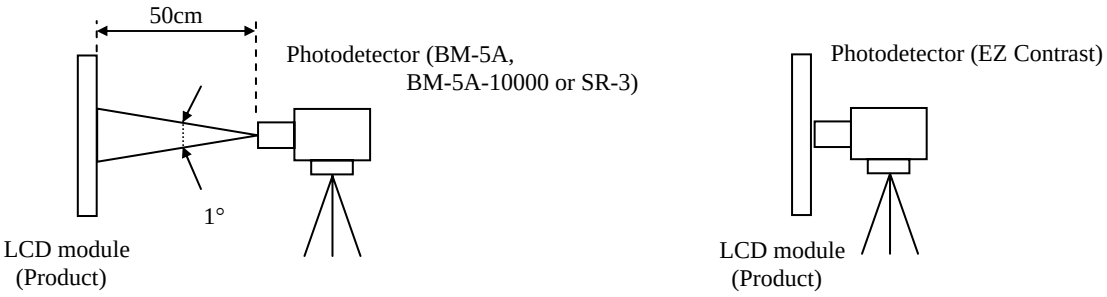

Note3: See "**4.10.2 Definition of contrast ratio**".
Note4: See "**4.10.3 Definition of luminance uniformity**".
Note5: These coordinates are found on CIE 1931 chromaticity diagram.
Note6: Product surface temperature: TopF= 29 °C
Note7: See "**4.10.4 Definition of response times**".
Note8: See "**4.10.5 Definition of viewing angles**".

4.10.2 Definition of contrast ratio

The contrast ratio is calculated by using the following formula.

$$\text{Contrast ratio (CR)} = \frac{\text{Luminance of white screen}}{\text{Luminance of black screen}}$$

4.10.3 Definition of luminance uniformity

The luminance uniformity is calculated by using following formula.

$$\text{Luminance uniformity (LU)} = \frac{\text{Maximum luminance from ① to ⑨}}{\text{Minimum luminance from ① to ⑨}}$$

The luminance is measured at near the 9 points shown below.

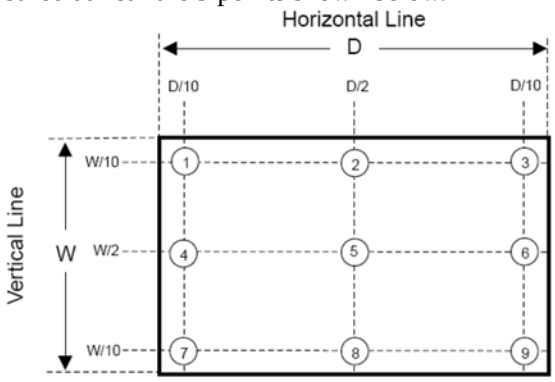

Display Area

4.10.4 Definition of response times

Response time is measured at the time when the luminance changes from "white" to "black", or "black" to "white" on the same screen point, by photo-detector. Ton is the time when the luminance changes from 90% down to 10%. Also Toff is the time when the luminance changes from 10% up to 90% (See the following diagram.).

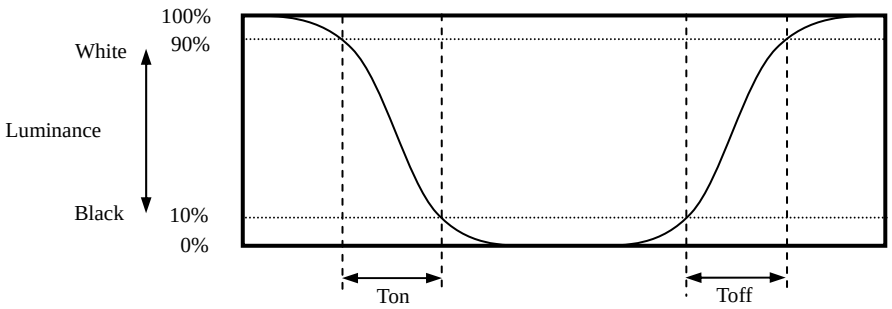

4.10.5 Definition of viewing angles

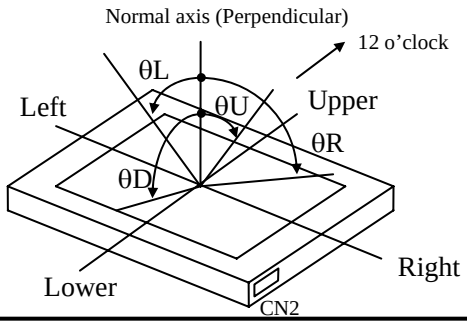

5. ESTIMATED LUMINANCE LIFETIME

The luminance lifetime is the time from initial luminance to half-luminance.

This lifetime is the estimated value, and is not guarantee value.

Condition		Estimated luminance lifetime (Life time expectancy) Note1, Note2, Note3	Unit
LED elementary substance	25°C (Ambient temperature of the product) Continuous operation, PWM Duty: 100%	50,000	h

Note1: Life time expectancy is mean time to half-luminance.
Note2: Estimated luminance lifetime is not the value for an LCD module but the value for LED elementary substance.
Note3: By ambient temperature, the lifetime changes particularly. Especially, in case the product works under high temperature environment, the lifetime becomes short.

6. RELIABILITY TESTS

Test item	Condition	Judgment Note1
High temperature and humidity (Operation)	① 50 ± 2°C, RH= 80%, 300hours ② Display data is black.	No display malfunctions
High temperature (Operation)	① 70 ± 3°C, 300hours ② Display data is black.	
Thermal shock (Non operation)	① -20 ± 3°C…30minutes 60 ± 3°C…30minutes ② 100cycles, 1hour/cycle ③ Temperature transition time is within 5 minutes.	
ESD (Operation)	Contact Discharge ① 150pF, 330Ω, ±8kV ② 9 places on a panel surface Note2 ③ 25 times each places at 1 sec interval Air Discharge ① 150pF, 330Ω, ±15kV ② 9 places on a panel surface Note2 ③ 25 times each places at 1 sec interval	
Vibration (Non operation)	① 5 to 100Hz, 11.76m/s^2 ② 1 minute/cycle ③ X, Y, Z directions ④ 50 times each directions	No display malfunctions No physical damages
Mechanical shock (Non operation)	① 294m/s^2, 11ms ② X, Y, Z directions ③ 3 times each directions	

Note1: Display and appearance are checked under environmental conditions equivalent to the inspection conditions of defect criteria.
Note2: See the following figure for discharge points.

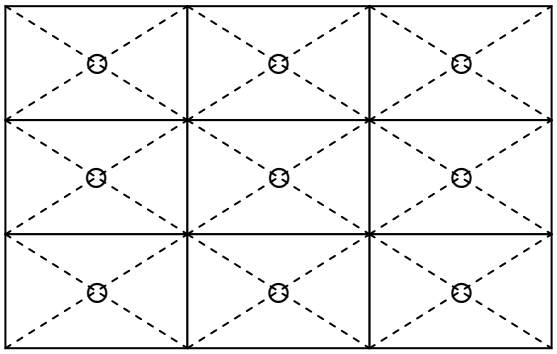

7. PRECAUTIONS

7.1 MEANING OF CAUTION SIGNS

The following caution signs have very important meaning. **Be sure to read "7.2 CAUTIONS" and "7.3 ATTENTIONS"!**

⚠	This sign has the meaning that a customer will be injured or the product will sustain damage if the customer practices wrong operations.
✋	This sign has the meaning that a customer will be injured if the customer practices wrong operations.

7.2 CAUTIONS

- **Be taken care when handling the touch panel. There is a danger of injury, because the touch panel has the glass edge and corner which are sharp.**
- **Do not shock and press the LCD panel and the backlight! There is a danger of breaking, because they are made of glass. (Shock: Equal to or no greater than 294m/s^2 and equal to or no greater than 11ms, Pressure: Equal to or no greater than 19.6 N (ϕ16mm jig))**

7.3 ATTENTIONS ⚠

7.3.1 Handling of the product

① Use gloves or fingerstalls and do not touch glass edge of touch panel when handling it, because it has sharp glass edge.

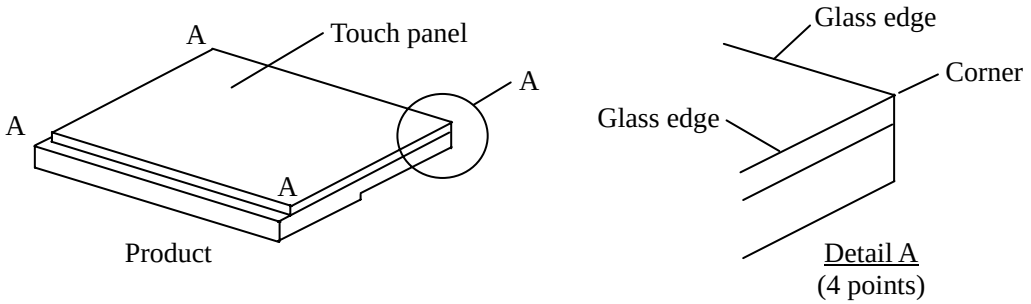

② Take hold of both ends without touching the circuit board when the product (LCD module) is picked up from inner packing box to avoid broken down or misadjustment, because of stress to mounting parts on the circuit board.
③ When the product is put on the table temporarily, display surface must be placed downward.
④ When handling the product, take the measures of electrostatic discharge with such as earth band, ionic shower and so on, because the product may be damaged by electrostatic.
⑤ The torque for product mounting screws must never exceed 0.392N·m. Higher torque might result in distortion of the bezel. And the length of product mounting screws must be ≤ 4.5mm.
⑥ The product must be installed using mounting holes without undue stress such as bends or twist (See outline drawings). And do not add undue stress to any portion (such as bezel flat area). Bends or twist described above and undue stress to any portion may cause display mura.
⑦ Do not hit or rub the surface of touch panel with hard materials, because it is easily scratched. (Touch panel pencil-hardness: (2H))

⑧ When cleaning the touch panel surface, wipe it with a soft dry cloth.
⑨ Do not push or pull the interface connectors while the product is working.
⑩ When handling the product, use of an original protection sheet on the product surface (polarizer) is recommended for protection of product surface. Adhesive type protection sheet may change color or characteristics of the polarizer.
⑪ Usually liquid crystals don't leak through the breakage of glasses because of the surface tension of thin layer and the construction of LCD panel. But, if you contact with liquid crystal by any chance, please wash it away with soap and water.

7.3.2 Environment

① Do not operate or store in high temperature, high humidity, dewdrop atmosphere or corrosive gases. Keep the product in packing box with antistatic pouch in room temperature to avoid dusts and sunlight, when storing the product.
② In order to prevent dew condensation occurred by temperature difference, the product packing box must be opened after enough time being left under the environment of an unpacking room. Evaluate the storage time sufficiently because dew condensation affected is changed by the environmental temperature and humidity. (Recommended leaving time: 6 hours or more with the original packing state after a customer receives the package)
③ Do not operate in high magnetic field. If not, circuit boards may be broken.
④ This product is not designed as radiation hardened.

7.3.3 Characteristics

The following items are neither defects nor failures.

① Characteristics of the LCD (such as response time, luminance, color uniformity and so on) may be changed depending on ambient temperature. If the product is stored under condition of low temperature for a long time, it may cause display mura. In this case, the product should be operated after enough time being left under condition of operating temperature.
② Display mura, flickering, vertical streams or tiny spots may be observed depending on display patterns.
③ Do not display a fixed pattern for a long time because it may cause image sticking. Use a screen saver, if the fixed pattern is displayed on the screen.
④ The display color may be changed depending on viewing angle because of the use of condenser sheet in the backlight.
⑤ Optical characteristics may be changed depending on input signal timings.
⑥ Touch panel film has polarizing characteristic. And the polarizer characteristics differ among products. Therefore, when seeing the displays through the other polarizing material (for example polarizing sunglasses), some displays can not be seen and some displays look different color darker because of polarizer characteristic mismatching between touch panel film and the other polarizing material.

7.3.4 Others

① All GND, VCC and VDD terminals should be used without any non-connected lines.
② Do not disassemble a product or adjust variable resistors.
③ See "REPLACEMENT MANUAL FOR LAMP HOLDER SET", when replacing lamp holder set.
④ Pack the product with the original shipping package, in order to avoid any damages during transportation, when returning the product to NLT.

8. OUTLINE DRAWINGS

8.1 FRONT VIEW

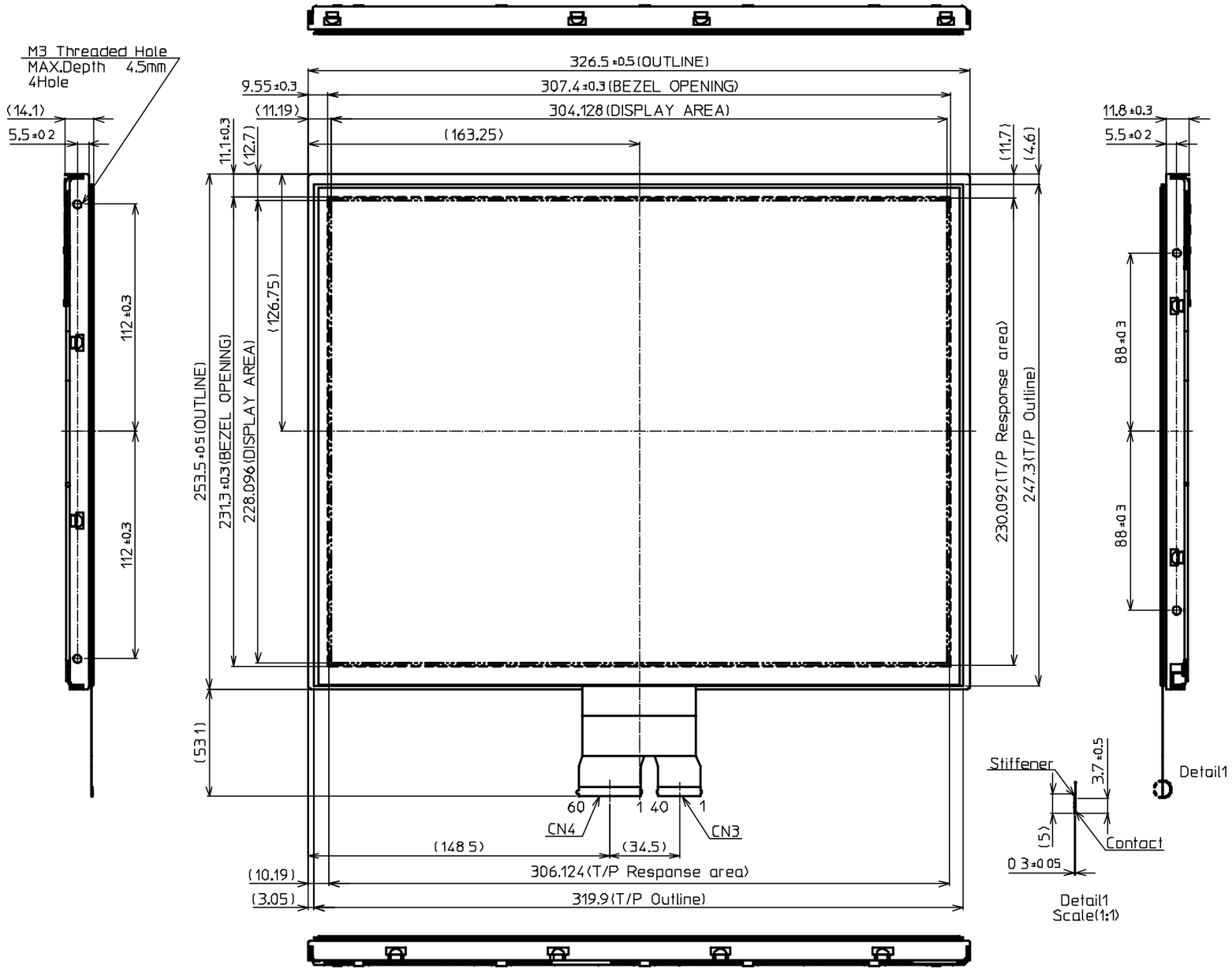

Note1: The values in parentheses are for reference.
Note2: The torque for product mounting screws must never exceed 0.392N·m. And the length of product mounting screws must be ≤ 4.5mm.

Unit: mm

8.2 REAR VIEW

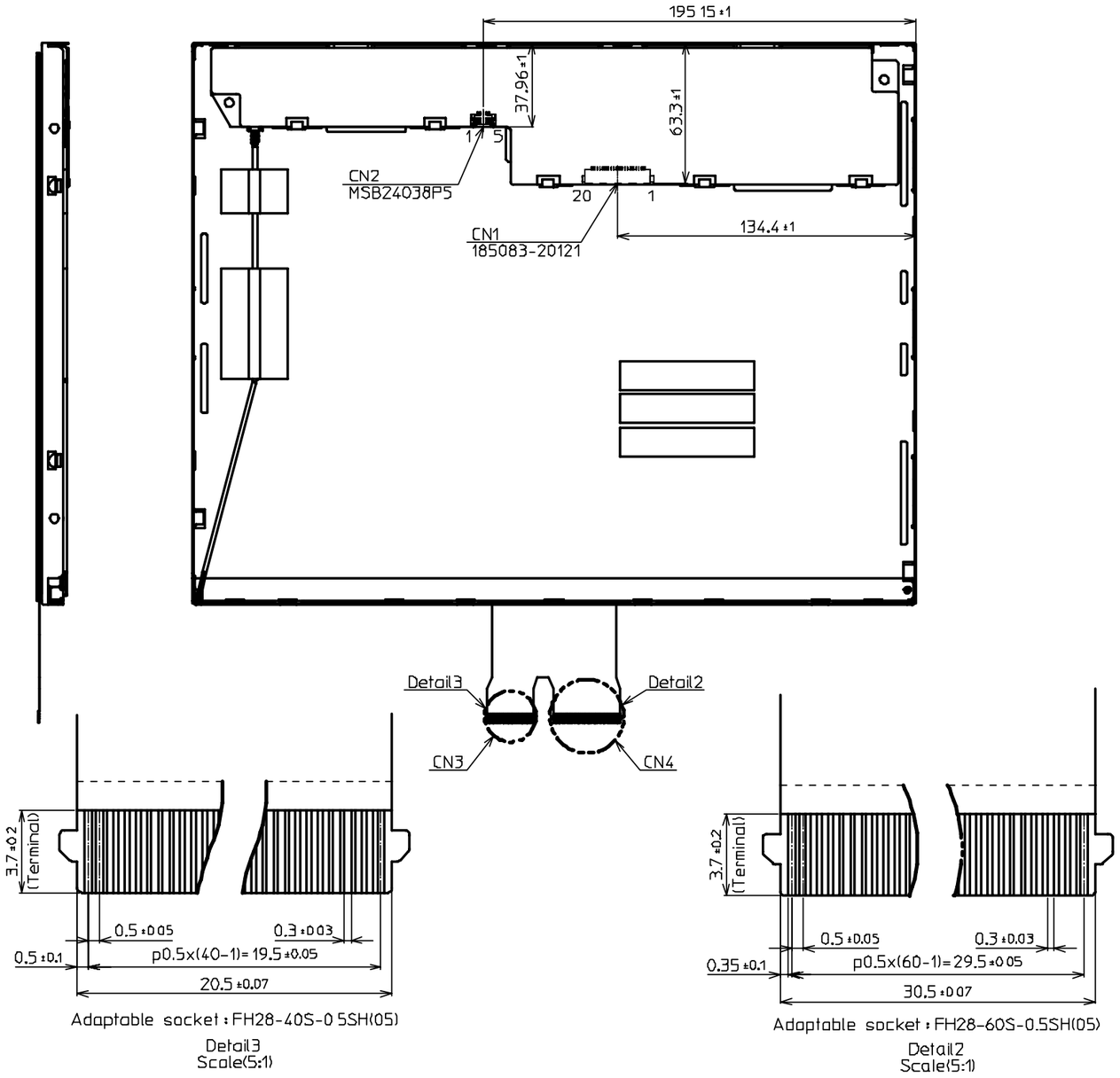

INSTALL GUIDANCE

1. Bezel mounting

If add a front bezel on the touch panel, please take care following issues.

- Use the front bezel made from insulative material such as plastic, resin and so on. If not, the touch panel sensitivity will be blocked or unstable by the bezel.
- Set the bezel out of touch panel active area. If not, the touch panel sensitivity will be blocked or unstable by the bezel.
- Keep the distance between the front bezel to the touch panel over 1mm.

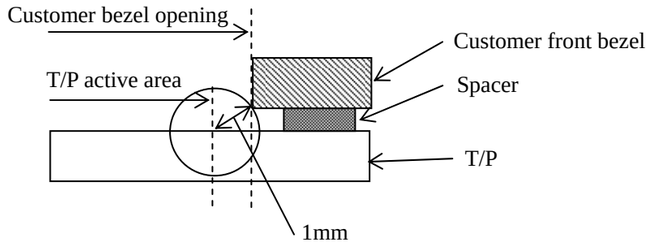

2. FPC handling

When bend the FPC, don't stress to the root area of the FPC, nor bending so tight.

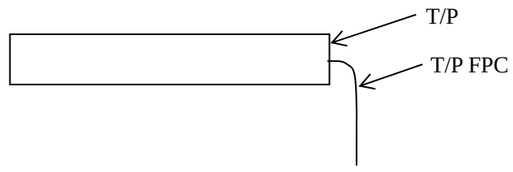

Note1: The values in parentheses are for reference.
Note2: The torque for product mounting screws must never exceed 0.392N·m. And the length of product mounting screws must be ≤ 4.5mm.

REVISION HISTORY

The inside of latest specifications is revised to the clerical error and the major improvement of previous edition. Only a changed part such as functions, characteristic value and so on that may affect a design of customers, are described especially below.

Edition	Document number	Prepared date	Revision contents and signature
1st edition	DOD-PP-1672	Jun. 10, 2013	**Revision contents** New issue **Signature of writer** *Approved by* R. Kawashima R. KAWASHIMA *Checked by* *Prepared by* E. Yoshimura E. YOSHIMURA