PRELIMINARY

NLT Technologies, Ltd.

# TFT COLOR LCD MODULE

## NL12880BC20-07F

### 31cm (12.1 Type)
### WXGA
### LVDS interface (1port)

## PRELIMINARY DATA SHEET

**DOD-PP-1852 (4th edition)**

**This PRELIMINARY DATA SHEET is updated document from DOD-PP-1761(3).**

**All information is subject to change without notice. Please confirm the sales representative before starting to design your system.**

## INTRODUCTION



NLT does and will not assume any liability for infringement of patents, copyrights or other intellectual property rights of any third party arising out of or in connection with application of the products described herein except for that directly attributable to mechanisms and workmanship thereof. No license, express or implied, is granted under any patent, copyright or other intellectual property right of NLT.

Some electronic products would fail or malfunction at a certain rate. In spite of every effort to enhance reliability of products by NLT, the possibility of failures and malfunction might not be avoided entirely. To prevent the risks of damage to death, human bodily injury or other property arising out thereof or in connection therewith, each customer is required to take sufficient measures in its safety designs and plans including, but not limited to, redundant system, fire-containment and anti-failure.

The products are classified into three grades: **"Standard"**, **"Special"**, and **"Specific"**.
Each quality grade is designed for applications described below. Any customer who intends to use a product for application other than that of Standard is required to contact an NLT sales representative in advance.

The **Standard:** Applications as any failure, malfunction or error of the products are free from any damage to death, human bodily injury or other property (Products Safety Issue) and not related the safety of the public (Social Issues), like general electric devices.
Examples: Office equipment, audio and visual equipment, communication equipment, test and measurement equipment, personal electronic equipment, home electronic appliances, car navigation system (with no vehicle control functions), seat entertainment monitor for vehicles and airplanes, fish finder (except marine radar integrated type), PDA, etc.

The **Special:** Applications as any failure, malfunction or error of the products might directly cause any damage to death, human bodily injury or other property (Products Safety Issue) and the safety of the public (Social Issues) and required high level reliability by conventional wisdom.
Examples: Vehicle/train/ship control system, traffic signals system, traffic information control system, air traffic control system, surgery/operation equipment monitor, disaster/crime prevention system, etc.

The **Specific:** Applications as any failure, malfunction or error of the products might severe cause any damage to death, human bodily injury or other property (Products Safety Issue) and the safety of the public (Social Issues) and developed, designed and manufactured in accordance with the standards or quality assurance program designated by the customer who requires extremely high level reliability and quality.
Examples: Aerospace system (except seat entertainment monitor), nuclear control system, life support system, etc.

The quality grade of this product is the **"Standard"** unless otherwise specified in this document.

## CONTENTS

## 1. OUTLINE

### 1.1 STRUCTURE AND PRINCIPLE

Color LCD module NL12880BC20-07F is composed of the amorphous silicon thin film transistor liquid crystal display (a-Si TFT LCD) panel structure with driver LSIs for driving the TFT (Thin Film Transistor) array and a backlight.

The a-Si TFT LCD panel structure is injected liquid crystal material into a narrow gap between the TFT array glass substrate and a color-filter glass substrate.

Color (Red, Green, Blue) data signals from a host system (e.g. signal generator, etc.) are modulated into best form for active matrix system by a signal processing board, and sent to the driver LSIs which drive the individual TFT arrays.

The TFT array as an electro-optical switch regulates the amount of transmitted light from the backlight assembly, when it is controlled by data signals. Color images are created by regulating the amount of transmitted light through the TFT array of red, green and blue dots.

### 1.2 APPLICATION

- For industrial use

### 1.3 FEATURES

- Ultra high luminance
- High contrast
- Wide temperature range
- Small foot print
- LVDS interface
- Reversible-scan direction
- Selectable 8bit or 6bit digital signals for data of RGB
- Replaceable lamp for backlight
- ColorXcell technology (Color Enhancement)

## 2. GENERAL SPECIFICATIONS

| | | |
|---|---|---|
| ***Display area*** | 261.12 (H) × 163.2 (V) mm | |
| ***Diagonal size of display*** | 31cm (12.1 inches) | |
| ***Drive system*** | a-Si TFT active matrix | |
| ***Display color*** | 16,777,216 colors (At 8-bit input, FRC terminal= High)<br>262,144 colors (At 6-bit input, FRC terminal= Low or Open) | |
| ***Pixel*** | 1280 (H) × 800 (V) pixels | |
| ***Pixel arrangement*** | RGB (Red dot, Green dot, Blue dot) vertical stripe | |
| ***Dot pitch*** | 0.068 (H) × 0.204 (V) mm | |
| ***Pixel pitch*** | 0.204 (H) × 0.204 (V) mm | |
| ***Module size*** | 277.7 (W) × 180.6 (H) × 8.7 (D) mm (typ.) | |
| ***Weight*** | (460) g (typ.) | 4 |
| ***Contrast ratio*** | (800):1 (typ.) | |
| ***Viewing angle*** | *At the contrast ratio ≥10:1*<br>• Horizontal: Right side 80° (typ.), Left side 80° (typ.)<br>• Vertical: Up side 80° (typ.), Down side 80° (typ.) | |
| ***Designed viewing direction*** | *At DPS= Low or Open: Normal scan*<br>• Viewing direction without image reversal: Up side (12 o'clock)<br>• Viewing direction with contrast peak: Down side (6 o'clock)<br>• Viewing angle with optimum grayscale (γ≒ 2.2): Normal axis (perpendicular) | |
| ***Polarizer surface*** | Antiglare | |
| ***Polarizer pencil-hardness*** | 3H (min.) [by JIS K5600] | |
| ***Color gamut*** | *At LCD panel center*<br>40 % (typ.) [against NTSC color space] | |
| ***Response time*** | *Ton+Toff (10%←→ 90%)*<br>15 ms (typ.) | 4 |
| ***Luminance*** | *At IL= (110)mA/One circuit*<br>(1,800) cd/m$^2$ (typ.) | 4 |
| ***Signal system*** | LVDS 1port<br>(Receiver: THC63LVDF84B, THine Electronics Inc. or equivalent)<br>[8bit/6bit digital signals for data of RGB colors, Dot clock (CLK), Data enable (DE)] | |
| ***Power supply voltage*** | LCD panel signal processing board: 3.3V | |
| ***Backlight*** | LED backlight:<br>(Replaceable part<br>• Lamp holder set: Type No. 121LHS202) | 4 |
| ***Power consumption*** | *At IL= (110)mA/One circuit, Checkered flag pattern*<br>(17.0) W (typ.) | 4 |

**3. BLOCK DIAGRAM**

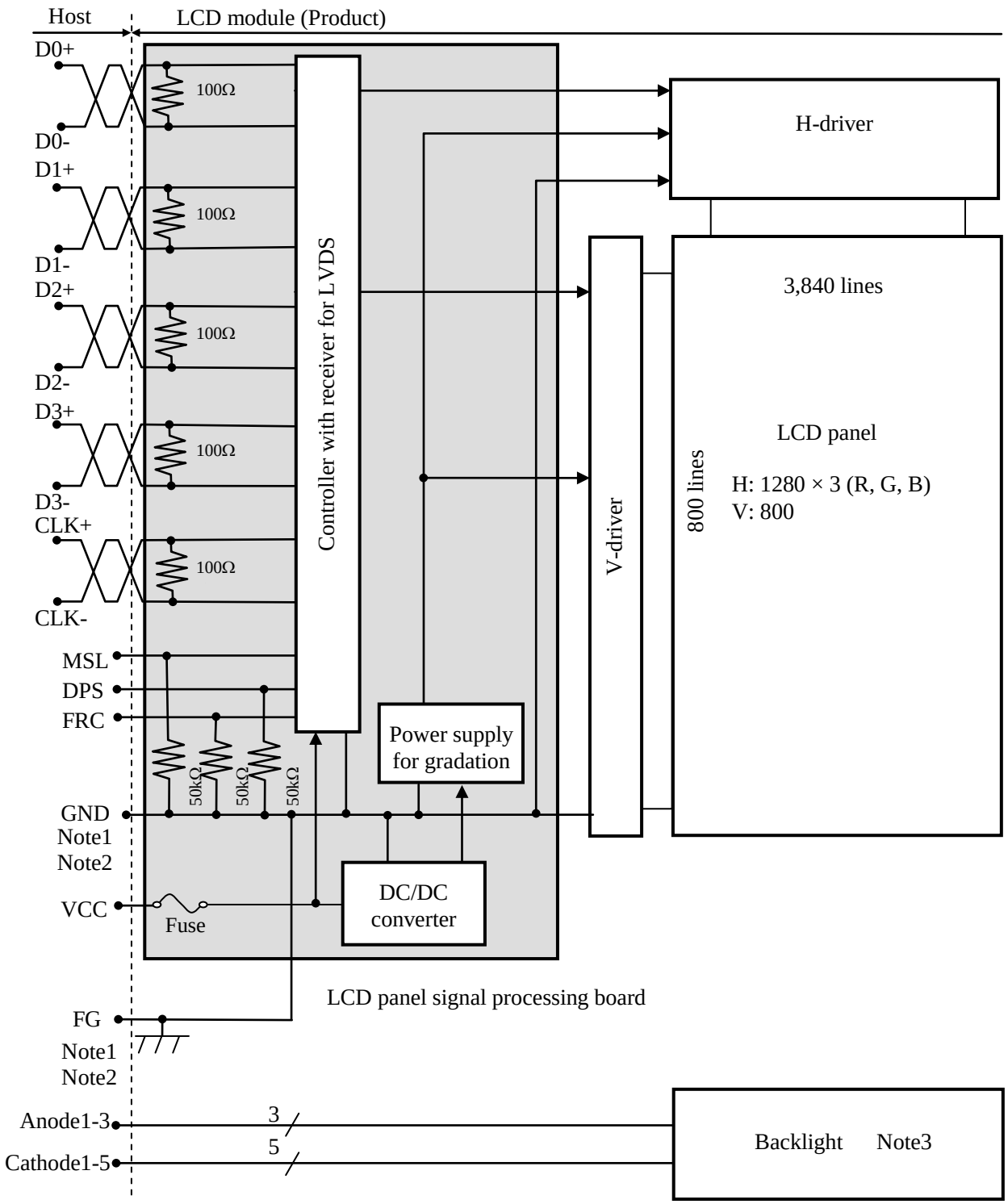


Note1: Relations between GND (Signal ground) and FG (Frame ground) in the LCD module are as follows.

| | |
|---|---|
| GND- FG | Connected |

Note2: GND and FG must be connected to customer equipment's ground, and it is recommended that these grounds to be connected together in customer equipment.

Note3: Backlight in detail

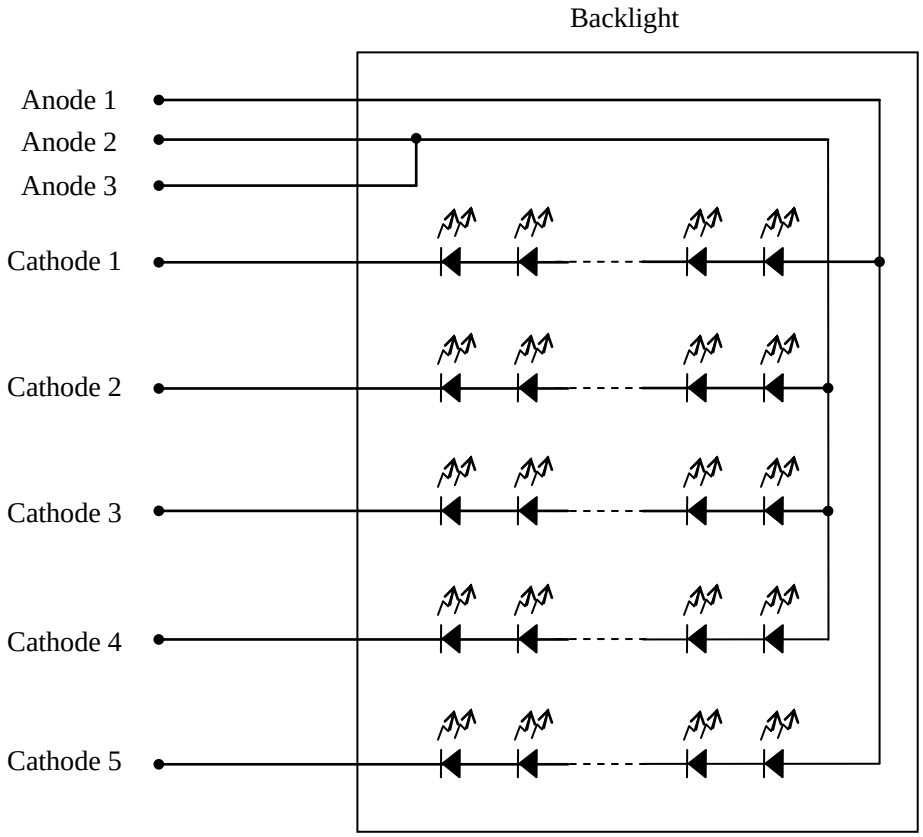

## 4. DETAILED SPECIFICATIONS

### 4.1 MECHANICAL SPECIFICATIONS

| Parameter | Specification | | Unit |
|---|---|---|---|
| Module size | 277.7 ± 0.5 (W) × 180.6 ± 0.5 (H) × 8.7 ± 0.5 (D) | Note1 | mm |
| Display area | 261.12 (H) × 163.2 (V) | Note1 | mm |
| Weight | (460) (typ.), (490) (max.) | | g |

4

Note1: See "**8. OUTLINE DRAWINGS**".

### 4.2 ABSOLUTE MAXIMUM RATINGS

| Parameter | | Symbol | Rating | Unit | Remarks |
|---|---|---|---|---|---|
| Power supply voltage | LCD panel signal processing board | VCC | (-0.3 to +4.0) | V | - |
| Input voltage for signals | Display signals Note1 | VD | (-0.3 to VCC+0.3) | V | |
| | Function signals Note2 | VF | | | |
| Backlight | Forward current | IL | 130 | mA | per one circuit |
| Storage temperature | | Tst | -30 to +80 | °C | - |
| Operating temperature | Front surface | TopF | -20 to +70 | °C | Note3 |
| | Rear surface | TopR | -20 to +70 | °C | Note4 |
| Relative humidity Note5 | | RH | ≤ 95 | % | Ta ≤ 40°C |
| | | | ≤ 85 | % | 40°C < Ta ≤ 50°C |
| | | | ≤ 55 | % | 50°C < Ta ≤ 60°C |
| | | | ≤ 36 | % | 60°C < Ta ≤ 70°C |
| Absolute humidity Note5 | | AH | ≤ 70 Note6 | $g/m^3$ | Ta > 70°C |

4

Note1: D0+/-, D1+/-, D2+/-, D3+/- and CLK+/-
Note2: DPS, FRC and MSL
Note3: Measured at LCD panel surface (including self-heat)
Note4: Measured at LCD module's rear shield surface (including self-heat)
Note5: No condensation
Note6: Water amount at Ta= 70°C and RH= 36%

## 4.3 ELECTRICAL CHARACTERISTICS

### 4.3.1 LCD panel signal processing board

(Ta= 25°C)

| Parameter | | Symbol | min. | typ. | max. | Unit | Remarks |
|---|---|---|---|---|---|---|---|
| Power supply voltage | | VCC | 3.0 | 3.3 | 3.6 | V | - |
| Power supply current | | ICC | - | (490) Note1 | (820) Note2 | mA | at VCC= 3.3V |
| Permissible ripple voltage | | VRP | - | - | 100 | mVp-p | for VCC |
| Differential input threshold voltage | High | VTH | - | - | +100 | mV | at VCM= 1.2V Note3 |
| | Low | VTL | -100 | - | - | mV | |
| Terminating resistance | | RT | - | 100 | - | Ω | - |
| Input voltage for DPS, FRC and MSL signals | High | VFH | 0.7VCC | - | VCC | V | CMOS level |
| | Low | VFL | 0 | - | 0.3VCC | V | |
| Input current for DPS, FRC and MSL signals | High | IFH | - | - | 300 | μA | - |
| | Low | IFL | -300 | - | - | μA | |

4

Note1: Checkered flag pattern [by EIAJ ED-2522]
Note2: Pattern for maximum current
Note3: Common mode voltage for LVDS receiver

4.3.2 Backlight lamp

(Ta= 25°C, Note1, Note2, Note3)

| Parameter | Symbol | min. | typ. | max. | Unit | Remarks |
|---|---|---|---|---|---|---|
| Forward current | IL | - | (110) | (120) | mA | - |
| Forward Voltage | VL | (24.7) | (27.9) | (30.6) | V | Ta= +25°C at IL= (110)mA /One circuit |
| | | (23.2) | - | - | | Ta= +70°C at IL= (110)mA /One circuit |
| | | - | - | (31.9) | | Ta= -20°C at IL= (110)mA /One circuit |
| | | - | - | (32.4) | | Ta= -20°C at IL= (120)mA /One circuit |

Note1: Please drive with constant current.
Note2: The above specifications are for one LED circuit of the backlight.
Note3: The Luminance uniformity may be changed depending on the current variation between 5 circuits. It is recommended that the current value difference among the circuits be less than 5%.

4.3.3 Power supply voltage ripple

This product works if the ripple voltage levels are over the permissible values as the following table, but there might be noise on the display image.

| Power supply voltage | | Ripple voltage Note1 (Measure at input terminal of power supply) | Unit |
|---|---|---|---|
| VCC | 3.3V | ≤ 100 | mVp-p |

Note1: The permissible ripple voltage includes spike noise.

4.3.4 Fuse

| Parameter | Fuse | | Rating | Fusing current | Remarks |
|---|---|---|---|---|---|
| | Type | Supplier | | | |
| VCC | FCC16202AB | KAMAYA ELECTRIC Co., Ltd | 2.0A<br>36.0V | 4.0A | Note1 |

4

Note1: The power supply's rated current must be more than the fusing current. If it is less than the fusing current, the fuse may not blow in a short time, and then nasty smell, smoke and so on may occur.

4.4 POWER SUPPLY VOLTAGE SEQUENCE

4.4.1 LCD panel signal processing board 4

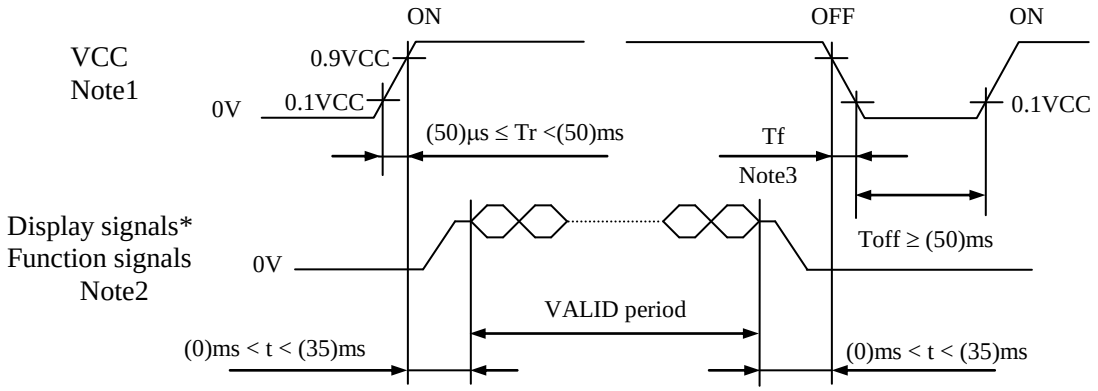


4 4 4

* These signals should be measured at the terminal of 100Ω resistance.

Note1: If there is a voltage variation (voltage drop) at the rising edge of VCC below TBDV, there is a possibility that a product does not work due to a protection circuit.
Note2: Display signals (D0+/-, D1+/-, D2+/-, D3+/- and CLK+/-) and function signals (DPS, FRC and MSL) must be set to Low or High-impedance, except the VALID period (See above sequence diagram), in order to avoid the circuitry damage.
If some of display and function signals of this product are cut while this product is working, even if the signal input to it once again, it might not work normally. If a customer stops the display and function signals, VCC also must be shut down.
Note3: Tf must be less than or equal to Tr in order to avoid any damage to the internal circuit.

4.4.2 LED driver 4

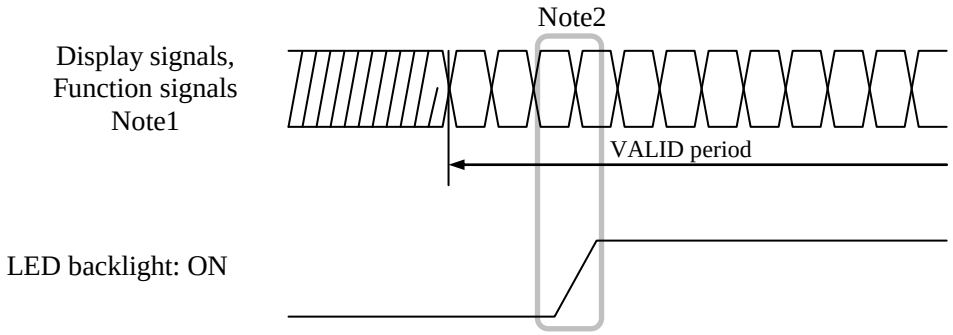


Note1: These are the display and function signals for LCD panel signal processing board.
Note2: The backlight should be turned on within the valid period of display and function signals, in order to avoid unstable data display.

## 4.5 CONNECTIONS AND FUNCTIONS FOR INTERFACE PINS

### 4.5.1 LCD panel signal processing board

CN1 socket (LCD module side): FI-SE20P-HFE (Japan Aviation Electronics Industry Limited (JAE))
Adaptable plug: FI-S20S (Japan Aviation Electronics Industry Limited (JAE))

| Pin No. | | Symbol | Signal | Input data signal: 8bit | | Input data signal: 6bit | Remarks |
|---|---|---|---|---|---|---|---|
| | | | | MAP A | MAP B | | |
| 1 | A | D3+ | Pixel data | R0-R1,G0-G1,B0-B1 | R6-R7,G6-G7,B6-B7 | - | Note1 Note2 |
| | B | GND | Ground | - | | Ground | Note3 |
| 2 | A | D3- | Pixel data | R0-R1,G0-G1,B0-B1 | R6-R7,G6-G7,B6-B7 | - | Note1 Note2 |
| | B | GND | Ground | - | | Ground | Note3 |
| 3 | | DPS | Selection of scan direction | High : Reverse scan<br>Low or Open : Normal scan | | | Note4 |
| 4 | | FRC | Selection of the number of colors | High | | Low or Open | Note1 Note5 |
| 5 | | GND | Ground | Ground | | | Note3 |
| 6 | | CLK+ | Pixel clock | Pixel clock | | | Note2 |
| 7 | | CLK- | | | | | |
| 8 | | GND | Ground | Ground | | | Note3 |
| 9 | | D2+ | Pixel data | B4-B7,DE | B2-B5,DE | | Note2 |
| 10 | | D2- | | | | | |
| 11 | | GND | Ground | Ground | | | Note3 |
| 12 | | D1+ | Pixel data | G3-G7,B2-B3 | G1-G5,B0-B1 | | Note2 |
| 13 | | D1- | | | | | |
| 14 | | GND | Ground | Ground | | | Note3 |
| 15 | | D0+ | Pixel data | R2-R7,G2 | R0-R5,G0 | | Note2 |
| 16 | | D0- | | | | | |
| 17 | | GND | Ground | Ground | | | Note3 |
| 18 | | MSL | Selection of LVDS input map | Low or Open | High | Low or Open | Note5 |
| 19 | | VCC | Power supply | Power supply | | | Note3 |
| 20 | | VCC | | | | | |

Note1: See "**4.6 DISPLAY COLORS AND INPUT DATA SIGNALS**".
Note2: Twist pair wires with 100Ω (Characteristic impedance) should be used between LCD panel signal processing board and LVDS transmitter.
Note3: All GND and VCC terminals should be used without any non-connected lines.
Note4: See "**4.8 SCANNING DIRECTIONS**".
Note5: See "**4.5.4 Connection between receiver and transmitter for LVDS**".

4.5.2 Backlight lamp

CN2 plug (LCD module side): SM10B-SHLS-TF (LF) (SN) (J.S.T. Mfg. Co., Ltd.)
Adaptable socket: SHLP-10V-S-B (J.S.T. Mfg. Co., Ltd.)

| Pin No. | Symbol | Signal | Remarks |
|---|---|---|---|
| 1 | A1 | Anode1 | - |
| 2 | A2 | Anode2 | - |
| 3 | A3 | Anode3 | - |
| 4 | N. C. | N. C. | Keep this pin Open. |
| 5 | N. C. | N. C. | Keep this pin Open. |
| 6 | K1 | Cathode1 | - |
| 7 | K2 | Cathode2 | - |
| 8 | K3 | Cathode3 | - |
| 9 | K4 | Cathode4 | - |
| 10 | K5 | Cathode5 | - |

4.5.3 Positions of plug and socket

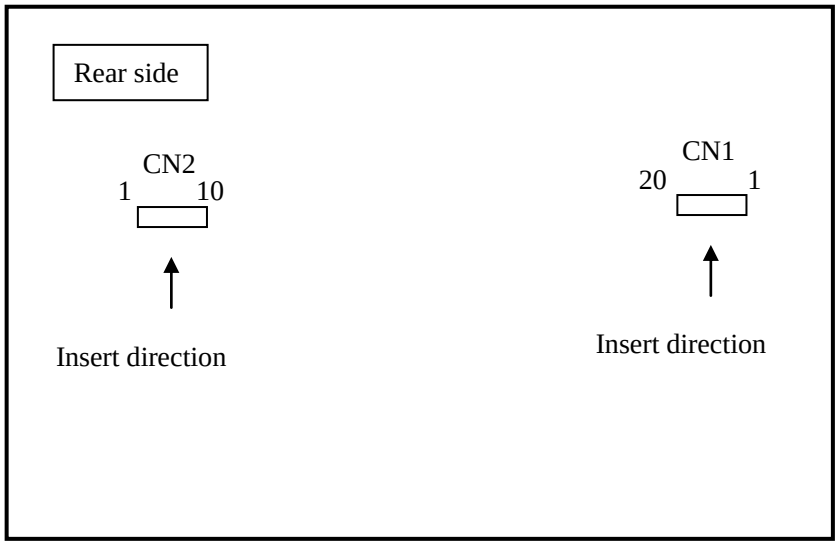

4.5.4 Connection between receiver and transmitter for LVDS

(1) Input data signal: 8bit, MAP A (MSL: Low, FRC: High)

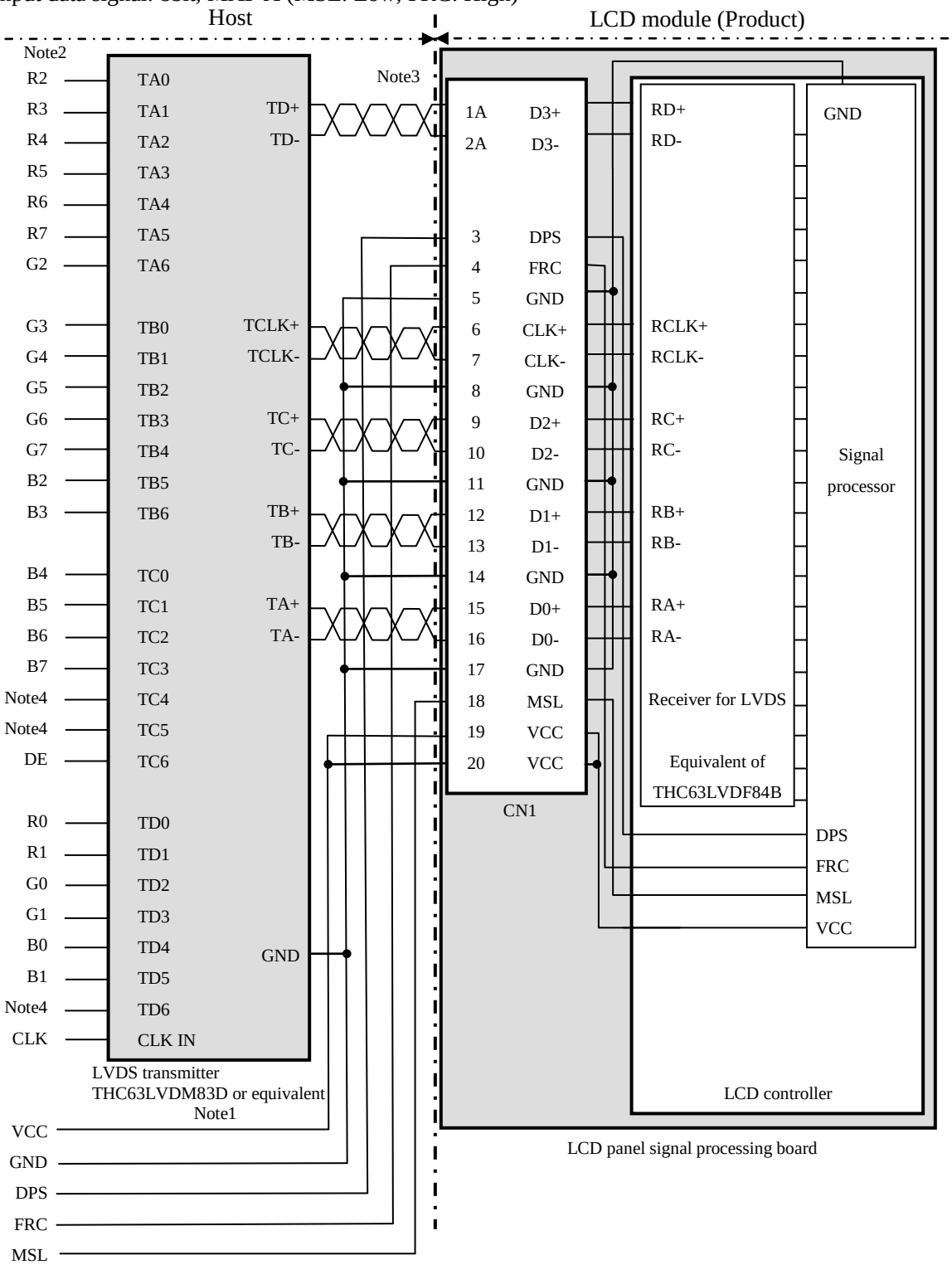


Note1: Recommended transmitter: THC63LVDM83D (THine Electronics Inc.) or equivalent

Note2: LSB (Least Significant Bit) – R0, G0, B0 MSB (Most Significant Bit) – R7, G7, B7

Note3: Twist pair wires with 100Ω (Characteristic impedance) should be used between LCD panel signal processing board and LVDS transmitter.

Note4: Input signals to TC4, TC5 and TD6 are not used inside the product, but do not keep them open to avoid noise problem.

(2) Input data signal: 8bit, MAP B (MSL: High, FRC: High)

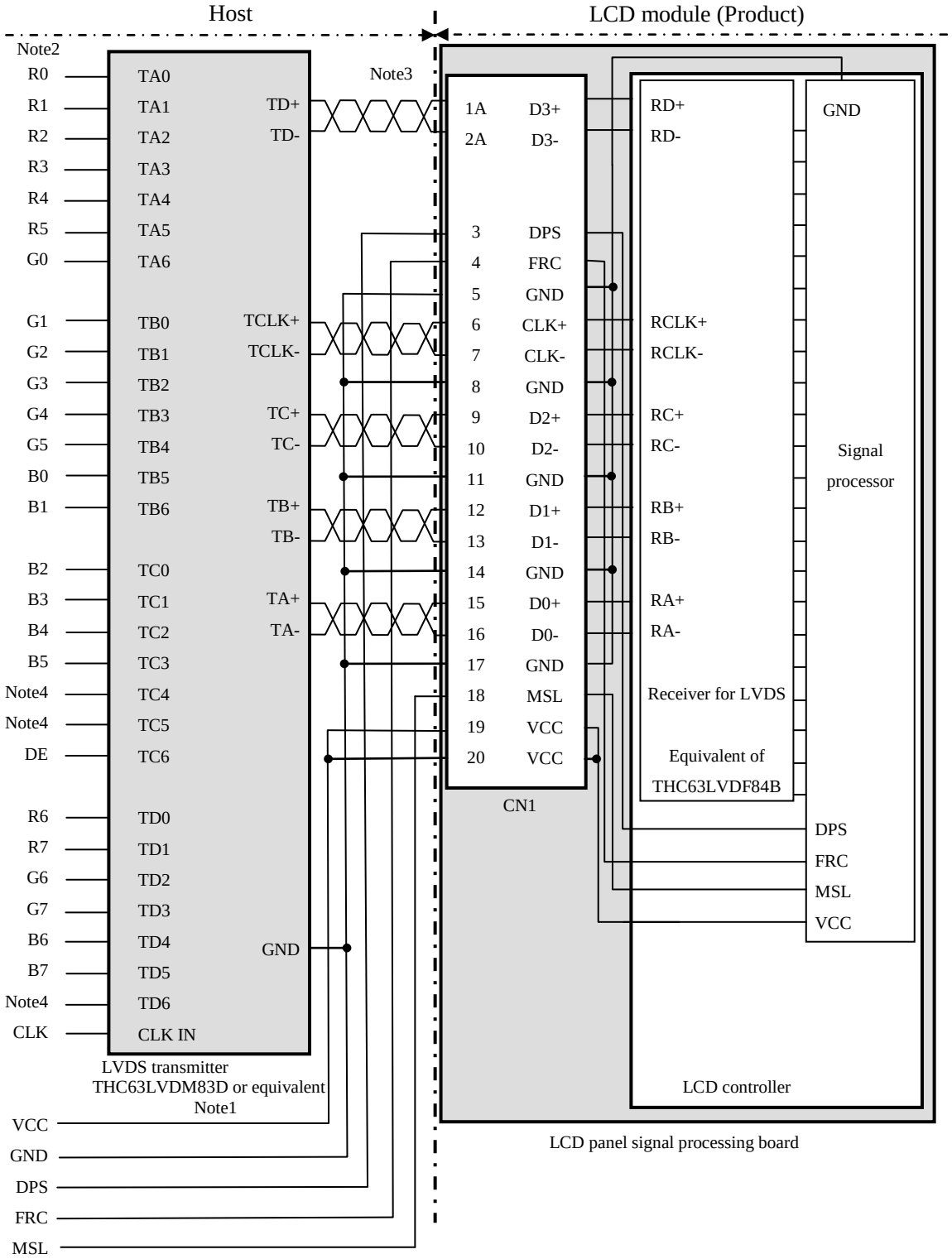


Note1: Recommended transmitter: THC63LVDM83D (THine Electronics Inc.) or equivalent
Note2: LSB (Least Significant Bit) – R0, G0, B0 MSB (Most Significant Bit) – R7, G7, B7
Note3: Twist pair wires with 100Ω (Characteristic impedance) should be used between LCD panel signal processing board and LVDS transmitter.
Note4: Input signals to TC4, TC5 and TD6 are not used inside the product, but do not keep them open to avoid noise problem.

(3) Input data signal: 6bit (MSL: Low, FRC: Low or Open)

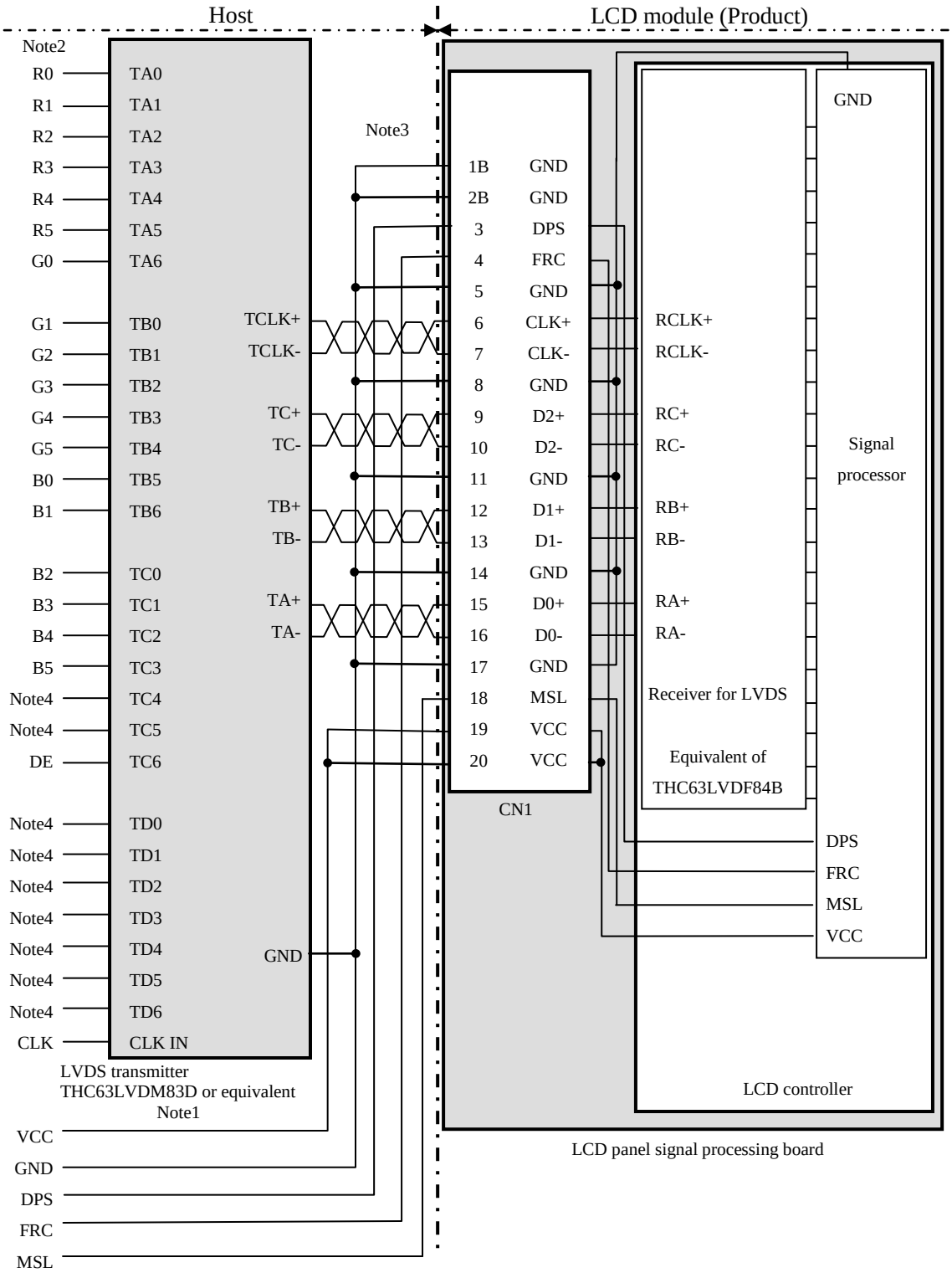


Note1: Recommended transmitter THC63LVDM83D (THine Electronics Inc.) or equivalent
Note2: LSB (Least Significant Bit) – R0, G0, B0 MSB (Most Significant Bit) – R5, G5, B5
Note3: Twist pair wires with 100Ω (Characteristic impedance) should be used between LCD panel signal processing board and LVDS transmitter.
Note4: Input signals to TC4, TC5 and TD0-6 are not used inside the product, but do not keep them open to avoid noise problem.

4.5.5 Input data mapping

(1) Input data signal: 8bit, MAP A

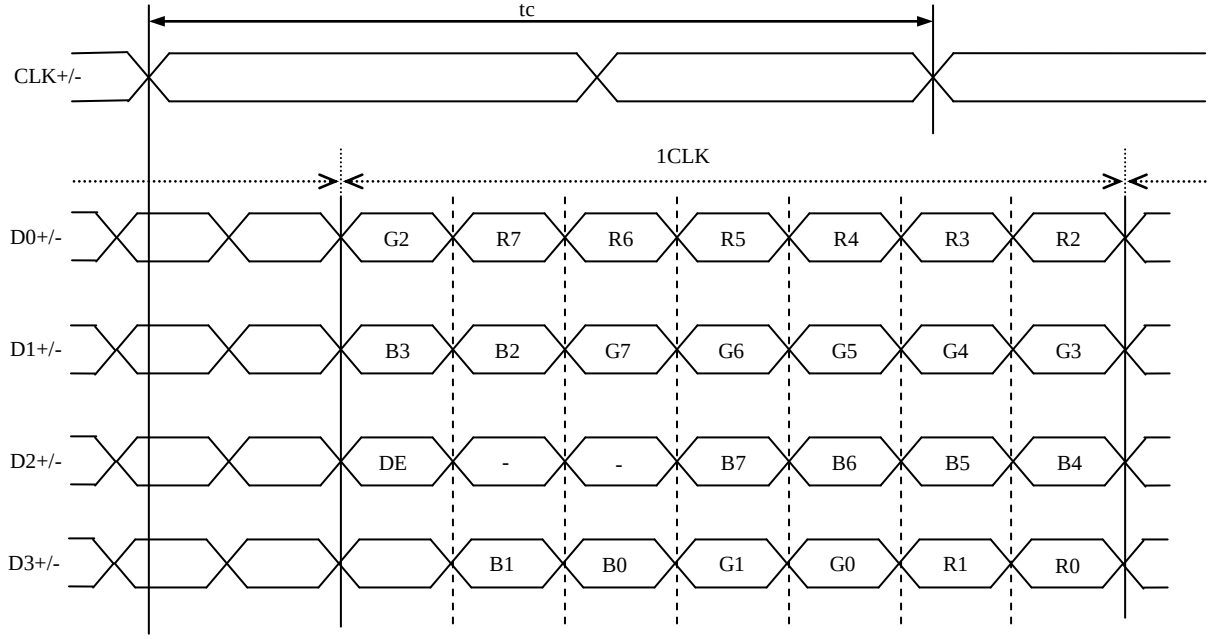


(2) Input data signal: 8bit, MAP B

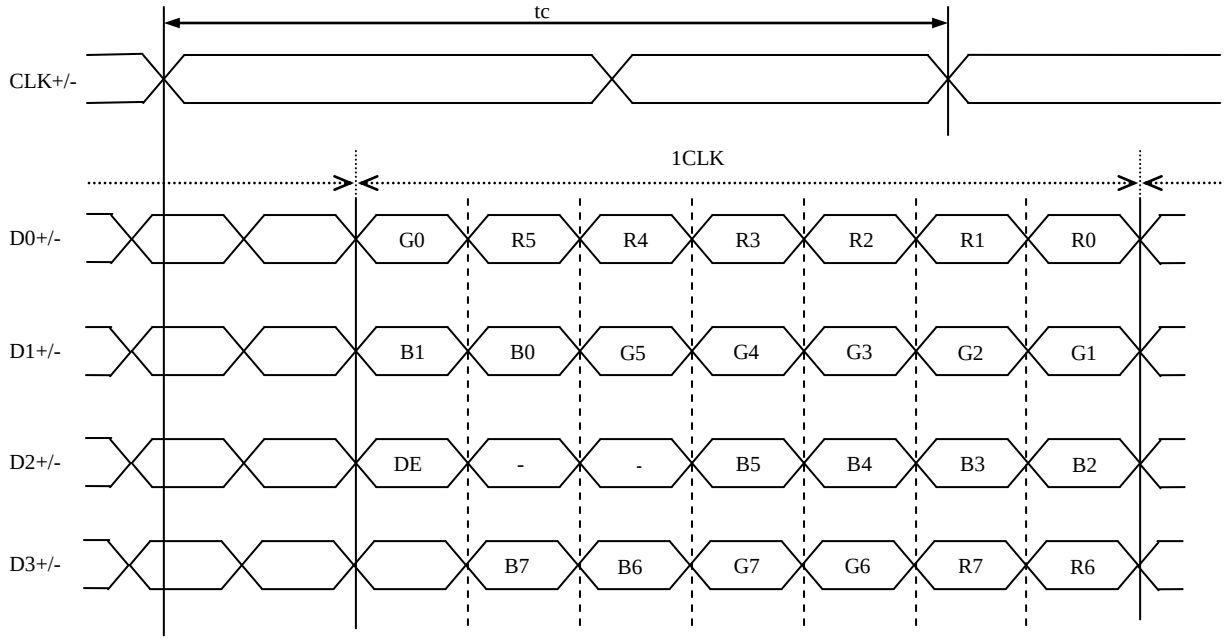

(3) Input data signal: 6bit

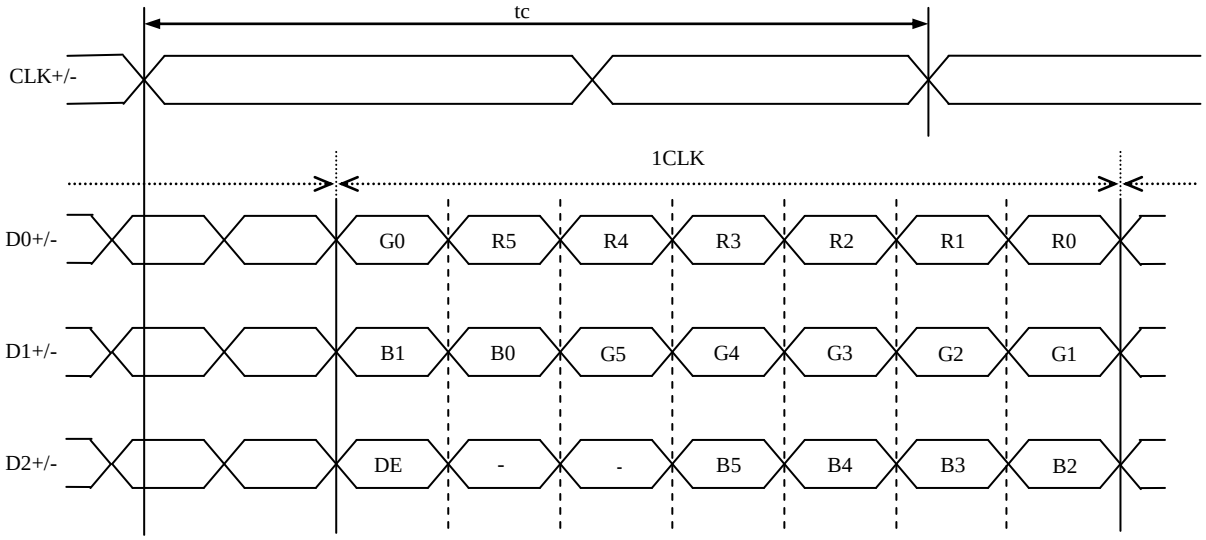


## 4.6 DISPLAY COLORS AND INPUT DATA SIGNALS

### 4.6.1 Combinations of input data signals, FRC and MSL signals

This product can display 16,777,216 colors equivalent with 256 gray scales and 262,144 colors with 64 gray scales by combination of input data signals, FRC and MSL signals. See the following table.

| Combination | Input data signals | Input Data mapping | CN1-<br>Pin No.1 and 2 | FRC terminal | MSL terminal | Display colors | Remarks |
|---|---|---|---|---|---|---|---|
| ① | 8 bit | MAP A | D3+/- | High | Low | 16,777,216 | Note1 |
| ② | 8 bit | MAP B | D3+/- | High | High | 16,777,216 | Note1 |
| ③ | 6 bit | - | GND | Low or Open | Low | 262,144 | Note2 |

Note1: See "**4.6.2 16,777,216 colors**".
Note2: See "**4.6.3 262,144 colors**".

4.6.2 16,777,216 colors

This product can display 16,777,216 colors equivalent with 256 gray scales by combination ① or ②.
(See "**4.6.1 Combinations of input data signals, FRC and MSL signal**".)
Also the relation between display colors and input data signals is as follows.

| Display colors | | Data signal (0: Low level, 1: High level) | | | | | | | | | | | | | | | | | | | | | | | |
|---|---|---|---|---|---|---|---|---|---|---|---|---|---|---|---|---|---|---|---|---|---|---|---|---|---|
| | | R7 | R6 | R5 | R4 | R3 | R2 | R1 | R0 | G7 | G6 | G5 | G4 | G3 | G2 | G1 | G0 | B7 | B6 | B5 | B4 | B3 | B2 | B1 | B0 |
| Basic Colors | Black | 0 | 0 | 0 | 0 | 0 | 0 | 0 | 0 | 0 | 0 | 0 | 0 | 0 | 0 | 0 | 0 | 0 | 0 | 0 | 0 | 0 | 0 | 0 | 0 |
| | Blue | 0 | 0 | 0 | 0 | 0 | 0 | 0 | 0 | 0 | 0 | 0 | 0 | 0 | 0 | 0 | 0 | 1 | 1 | 1 | 1 | 1 | 1 | 1 | 1 |
| | Red | 1 | 1 | 1 | 1 | 1 | 1 | 1 | 1 | 0 | 0 | 0 | 0 | 0 | 0 | 0 | 0 | 0 | 0 | 0 | 0 | 0 | 0 | 0 | 0 |
| | Magenta | 1 | 1 | 1 | 1 | 1 | 1 | 1 | 1 | 0 | 0 | 0 | 0 | 0 | 0 | 0 | 0 | 1 | 1 | 1 | 1 | 1 | 1 | 1 | 1 |
| | Green | 0 | 0 | 0 | 0 | 0 | 0 | 0 | 0 | 1 | 1 | 1 | 1 | 1 | 1 | 1 | 1 | 0 | 0 | 0 | 0 | 0 | 0 | 0 | 0 |
| | Cyan | 0 | 0 | 0 | 0 | 0 | 0 | 0 | 0 | 1 | 1 | 1 | 1 | 1 | 1 | 1 | 1 | 1 | 1 | 1 | 1 | 1 | 1 | 1 | 1 |
| | Yellow | 1 | 1 | 1 | 1 | 1 | 1 | 1 | 1 | 1 | 1 | 1 | 1 | 1 | 1 | 1 | 1 | 0 | 0 | 0 | 0 | 0 | 0 | 0 | 0 |
| | White | 1 | 1 | 1 | 1 | 1 | 1 | 1 | 1 | 1 | 1 | 1 | 1 | 1 | 1 | 1 | 1 | 1 | 1 | 1 | 1 | 1 | 1 | 1 | 1 |
| Red gray scale | Black | 0 | 0 | 0 | 0 | 0 | 0 | 0 | 0 | 0 | 0 | 0 | 0 | 0 | 0 | 0 | 0 | 0 | 0 | 0 | 0 | 0 | 0 | 0 | 0 |
| | | 0 | 0 | 0 | 0 | 0 | 0 | 0 | 1 | 0 | 0 | 0 | 0 | 0 | 0 | 0 | 0 | 0 | 0 | 0 | 0 | 0 | 0 | 0 | 0 |
| | dark | 0 | 0 | 0 | 0 | 0 | 0 | 1 | 0 | 0 | 0 | 0 | 0 | 0 | 0 | 0 | 0 | 0 | 0 | 0 | 0 | 0 | 0 | 0 | 0 |
| | ↑ | | | | | : | | | | | | | | : | | | | | | | | : | | | |
| | ↓ | | | | | : | | | | | | | | : | | | | | | | | : | | | |
| | bright | 1 | 1 | 1 | 1 | 1 | 1 | 0 | 1 | 0 | 0 | 0 | 0 | 0 | 0 | 0 | 0 | 0 | 0 | 0 | 0 | 0 | 0 | 0 | 0 |
| | | 1 | 1 | 1 | 1 | 1 | 1 | 1 | 0 | 0 | 0 | 0 | 0 | 0 | 0 | 0 | 0 | 0 | 0 | 0 | 0 | 0 | 0 | 0 | 0 |
| | Red | 1 | 1 | 1 | 1 | 1 | 1 | 1 | 1 | 0 | 0 | 0 | 0 | 0 | 0 | 0 | 0 | 0 | 0 | 0 | 0 | 0 | 0 | 0 | 0 |
| Green gray scale | Black | 0 | 0 | 0 | 0 | 0 | 0 | 0 | 0 | 0 | 0 | 0 | 0 | 0 | 0 | 0 | 0 | 0 | 0 | 0 | 0 | 0 | 0 | 0 | 0 |
| | | 0 | 0 | 0 | 0 | 0 | 0 | 0 | 0 | 0 | 0 | 0 | 0 | 0 | 0 | 0 | 1 | 0 | 0 | 0 | 0 | 0 | 0 | 0 | 0 |
| | dark | 0 | 0 | 0 | 0 | 0 | 0 | 0 | 0 | 0 | 0 | 0 | 0 | 0 | 0 | 1 | 0 | 0 | 0 | 0 | 0 | 0 | 0 | 0 | 0 |
| | ↑ | | | | | : | | | | | | | | : | | | | | | | | : | | | |
| | ↓ | | | | | : | | | | | | | | : | | | | | | | | : | | | |
| | bright | 0 | 0 | 0 | 0 | 0 | 0 | 0 | 0 | 1 | 1 | 1 | 1 | 1 | 1 | 0 | 1 | 0 | 0 | 0 | 0 | 0 | 0 | 0 | 0 |
| | | 0 | 0 | 0 | 0 | 0 | 0 | 0 | 0 | 1 | 1 | 1 | 1 | 1 | 1 | 1 | 0 | 0 | 0 | 0 | 0 | 0 | 0 | 0 | 0 |
| | Green | 0 | 0 | 0 | 0 | 0 | 0 | 0 | 0 | 1 | 1 | 1 | 1 | 1 | 1 | 1 | 1 | 0 | 0 | 0 | 0 | 0 | 0 | 0 | 0 |
| Blue gray scale | Black | 0 | 0 | 0 | 0 | 0 | 0 | 0 | 0 | 0 | 0 | 0 | 0 | 0 | 0 | 0 | 0 | 0 | 0 | 0 | 0 | 0 | 0 | 0 | 0 |
| | | 0 | 0 | 0 | 0 | 0 | 0 | 0 | 0 | 0 | 0 | 0 | 0 | 0 | 0 | 0 | 0 | 0 | 0 | 0 | 0 | 0 | 0 | 0 | 1 |
| | dark | 0 | 0 | 0 | 0 | 0 | 0 | 0 | 0 | 0 | 0 | 0 | 0 | 0 | 0 | 0 | 0 | 0 | 0 | 0 | 0 | 0 | 0 | 1 | 0 |
| | ↑ | | | | | : | | | | | | | | : | | | | | | | | : | | | |
| | ↓ | | | | | : | | | | | | | | : | | | | | | | | : | | | |
| | bright | 0 | 0 | 0 | 0 | 0 | 0 | 0 | 0 | 0 | 0 | 0 | 0 | 0 | 0 | 0 | 0 | 1 | 1 | 1 | 1 | 1 | 1 | 0 | 1 |
| | | 0 | 0 | 0 | 0 | 0 | 0 | 0 | 0 | 0 | 0 | 0 | 0 | 0 | 0 | 0 | 0 | 1 | 1 | 1 | 1 | 1 | 1 | 1 | 0 |
| | Blue | 0 | 0 | 0 | 0 | 0 | 0 | 0 | 0 | 0 | 0 | 0 | 0 | 0 | 0 | 0 | 0 | 1 | 1 | 1 | 1 | 1 | 1 | 1 | 1 |

4.6.3 262,144 colors

This product can display 262,144 colors with 64 gray scales by combination ③.
(See "**4.6.1 Combinations of input data signals, FRC and MSL signal** ".)
Also the relation between display colors and input data signals is as follows.

| Display colors | | Data signal (0: Low level, 1: High level) | | | | | | | | | | | | | | | | | |
|---|---|---|---|---|---|---|---|---|---|---|---|---|---|---|---|---|---|---|---|
| | | R5 | R4 | R3 | R2 | R1 | R0 | G5 | G4 | G3 | G2 | G1 | G0 | B5 | B4 | B3 | B2 | B1 | B0 |
| Basic colors | Black | 0 | 0 | 0 | 0 | 0 | 0 | 0 | 0 | 0 | 0 | 0 | 0 | 0 | 0 | 0 | 0 | 0 | 0 |
| | Blue | 0 | 0 | 0 | 0 | 0 | 0 | 0 | 0 | 0 | 0 | 0 | 0 | 1 | 1 | 1 | 1 | 1 | 1 |
| | Red | 1 | 1 | 1 | 1 | 1 | 1 | 0 | 0 | 0 | 0 | 0 | 0 | 0 | 0 | 0 | 0 | 0 | 0 |
| | Magenta | 1 | 1 | 1 | 1 | 1 | 1 | 0 | 0 | 0 | 0 | 0 | 0 | 1 | 1 | 1 | 1 | 1 | 1 |
| | Green | 0 | 0 | 0 | 0 | 0 | 0 | 1 | 1 | 1 | 1 | 1 | 1 | 0 | 0 | 0 | 0 | 0 | 0 |
| | Cyan | 0 | 0 | 0 | 0 | 0 | 0 | 1 | 1 | 1 | 1 | 1 | 1 | 1 | 1 | 1 | 1 | 1 | 1 |
| | Yellow | 1 | 1 | 1 | 1 | 1 | 1 | 1 | 1 | 1 | 1 | 1 | 1 | 0 | 0 | 0 | 0 | 0 | 0 |
| | White | 1 | 1 | 1 | 1 | 1 | 1 | 1 | 1 | 1 | 1 | 1 | 1 | 1 | 1 | 1 | 1 | 1 | 1 |
| Red gray scale | Black | 0 | 0 | 0 | 0 | 0 | 0 | 0 | 0 | 0 | 0 | 0 | 0 | 0 | 0 | 0 | 0 | 0 | 0 |
| | | 0 | 0 | 0 | 0 | 0 | 1 | 0 | 0 | 0 | 0 | 0 | 0 | 0 | 0 | 0 | 0 | 0 | 0 |
| | dark | 0 | 0 | 0 | 0 | 1 | 0 | 0 | 0 | 0 | 0 | 0 | 0 | 0 | 0 | 0 | 0 | 0 | 0 |
| | ↑ | | | | : | | | | | | : | | | | | | : | | |
| | ↓ | | | | : | | | | | | : | | | | | | : | | |
| | bright | 1 | 1 | 1 | 1 | 0 | 1 | 0 | 0 | 0 | 0 | 0 | 0 | 0 | 0 | 0 | 0 | 0 | 0 |
| | | 1 | 1 | 1 | 1 | 1 | 0 | 0 | 0 | 0 | 0 | 0 | 0 | 0 | 0 | 0 | 0 | 0 | 0 |
| | Red | 1 | 1 | 1 | 1 | 1 | 1 | 0 | 0 | 0 | 0 | 0 | 0 | 0 | 0 | 0 | 0 | 0 | 0 |
| Green gray scale | Black | 0 | 0 | 0 | 0 | 0 | 0 | 0 | 0 | 0 | 0 | 0 | 0 | 0 | 0 | 0 | 0 | 0 | 0 |
| | | 0 | 0 | 0 | 0 | 0 | 0 | 0 | 0 | 0 | 0 | 0 | 1 | 0 | 0 | 0 | 0 | 0 | 0 |
| | dark | 0 | 0 | 0 | 0 | 0 | 0 | 0 | 0 | 0 | 0 | 1 | 0 | 0 | 0 | 0 | 0 | 0 | 0 |
| | ↑ | | | | : | | | | | | : | | | | | | : | | |
| | ↓ | | | | : | | | | | | : | | | | | | : | | |
| | bright | 0 | 0 | 0 | 0 | 0 | 0 | 1 | 1 | 1 | 1 | 0 | 1 | 0 | 0 | 0 | 0 | 0 | 0 |
| | | 0 | 0 | 0 | 0 | 0 | 0 | 1 | 1 | 1 | 1 | 1 | 0 | 0 | 0 | 0 | 0 | 0 | 0 |
| | Green | 0 | 0 | 0 | 0 | 0 | 0 | 1 | 1 | 1 | 1 | 1 | 1 | 0 | 0 | 0 | 0 | 0 | 0 |
| Blue gray scale | Black | 0 | 0 | 0 | 0 | 0 | 0 | 0 | 0 | 0 | 0 | 0 | 0 | 0 | 0 | 0 | 0 | 0 | 0 |
| | | 0 | 0 | 0 | 0 | 0 | 0 | 0 | 0 | 0 | 0 | 0 | 0 | 0 | 0 | 0 | 0 | 0 | 1 |
| | dark | 0 | 0 | 0 | 0 | 0 | 0 | 0 | 0 | 0 | 0 | 0 | 0 | 0 | 0 | 0 | 0 | 1 | 0 |
| | ↑ | | | | : | | | | | | : | | | | | | : | | |
| | ↓ | | | | : | | | | | | : | | | | | | : | | |
| | bright | 0 | 0 | 0 | 0 | 0 | 0 | 0 | 0 | 0 | 0 | 0 | 0 | 1 | 1 | 1 | 1 | 0 | 1 |
| | | 0 | 0 | 0 | 0 | 0 | 0 | 0 | 0 | 0 | 0 | 0 | 0 | 1 | 1 | 1 | 1 | 1 | 0 |
| | Blue | 0 | 0 | 0 | 0 | 0 | 0 | 0 | 0 | 0 | 0 | 0 | 0 | 1 | 1 | 1 | 1 | 1 | 1 |

4.7 DISPLAY POSITIONS

The following table is the coordinates per pixel (See **"4.8 SCANNING DIRECTIONS"**.).

C (0, 0)

| R | G | B |
|---|---|---|

| | | | | | | |
|---|---|---|---|---|---|---|
| C( 0, 0) | C( 1, 0) | • • • | C( X, 0) | • • • | C(1278, 0) | C(1279, 0) |
| C( 0, 1) | C( 1, 1) | • • • | C( X, 1) | • • • | C(1278, 1) | C(1279, 1) |
| • • • | • • • | • • • | • • • | • • • | • • • | • • • |
| C( 0, Y) | C( 1, Y) | • • • | C( X, Y) | • • • | C(1278, Y) | C(1279, Y) |
| • • • | • • • | • • • | • • • | • • • | • • • | • • • |
| C( 0, 798) | C( 1, 798) | • • • | C( X, 798) | • • • | C(1278, 798) | C(1279, 798) |
| C( 0, 799) | C( 1, 799) | • • • | C( X, 799) | • • • | C(1278, 799) | C(1279, 799) |

4.8 SCANNING DIRECTIONS

The following figures are seen from a front view.

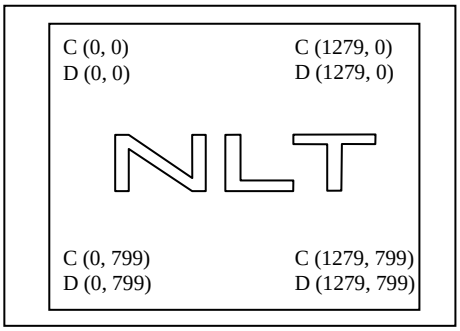


Note1

Figure1. Normal scan (DPS: Low or Open)

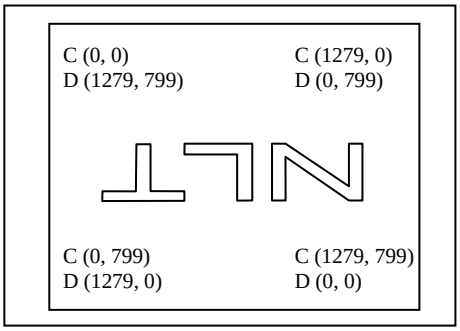


Note1

Figure2. Reverse scan (DPS: High)

Note1: Meaning of C (X, Y) and D (X, Y)
C (X, Y): The coordinates of the display position (See "**4.7 DISPLAY POSITIONS**".)
D (X, Y): The data number of input signal for LCD panel signal processing board

## 4.9 INPUT SIGNAL TIMINGS

### 4.9.1 Outline of input signal timings

- Horizontal signal

Note1

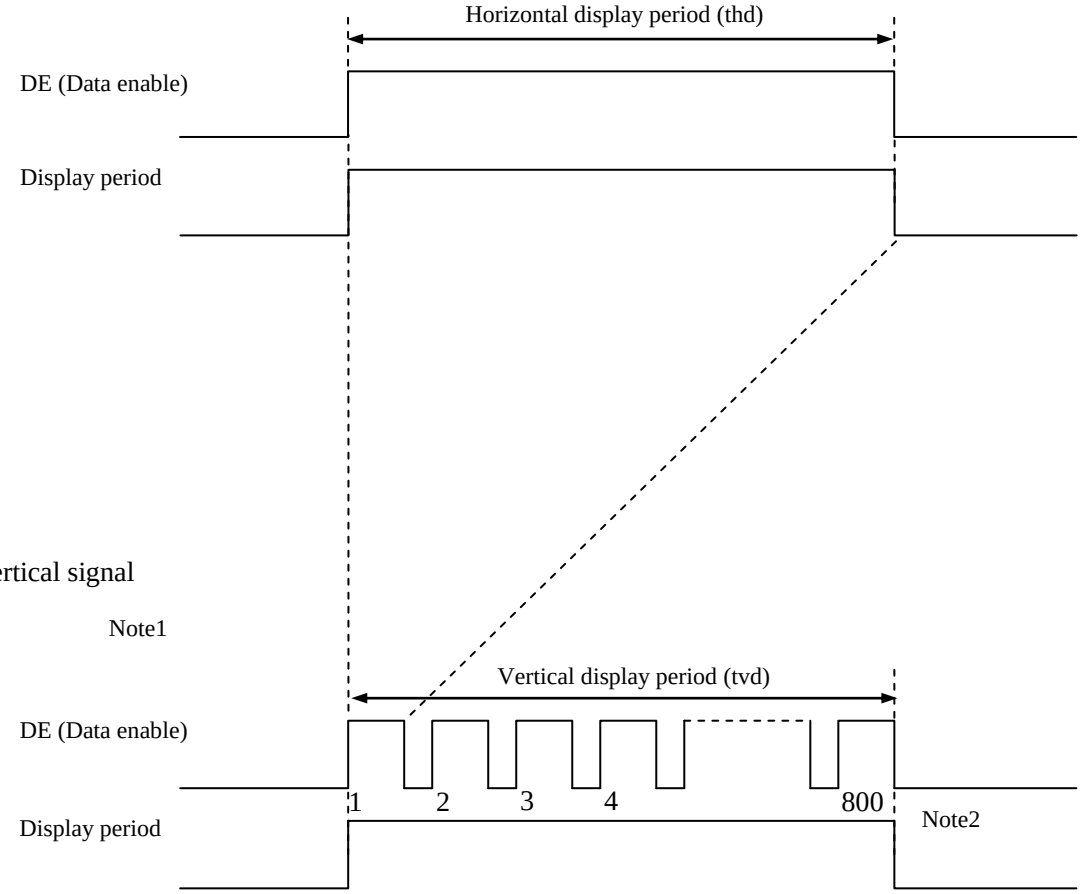


- Vertical signal

Note1

Note1: This diagram indicates virtual signal for set up to timing.
Note2: See "**4.9.3 Input signal timing chart**" for the pulse number.

4.9.2 Timing characteristics

(Note1, Note2, Note3)

| Parameter | | | Symbol | min. | typ. | max. | Unit | Remarks |
|---|---|---|---|---|---|---|---|---|
| CLK | Frequency | | 1/tc | 67.0 | 71.0 | 75.0 | MHz | 14.085 ns (typ.) |
| | Duty | | - | - | | | - | - |
| | Rise time, Fall time | | - | | | | ns | |
| DATA | CLK-DATA | Setup time | - | - | | | ns | - |
| | | Hold time | - | | | | ns | |
| | Rise time, Fall time | | - | | | | ns | |
| DE | Horizontal | Cycle | th | 17.20 | 20.28 | 21.49 | μs | 49.306 kHz (typ.) |
| | | | | 1290 | 1440 | - | CLK | |
| | | Display period | thd | 1280 | | | CLK | |
| | Vertical (One frame) | Cycle | tv | 14.16 | 16.69 | 17.69 | ms | 59.92 Hz (typ.) |
| | | | | - | 823 | - | H | |
| | | Display period | tvd | 800 | | | H | |
| | CLK-DE | Setup time | - | - | | | ns | - |
| | | Hold time | - | | | | ns | |
| | Rise time, Fall time | | - | | | | ns | |

Note1: Definition of parameters is as follows.
tc= 1CLK, th= 1H
Note2: See the data sheet of LVDS transmitter.
Note3: Vertical cycle (tv) should be specified in integral multiple of Horizontal cycle (th).

4.9.3 Input signal timing chart

Horizontal timing

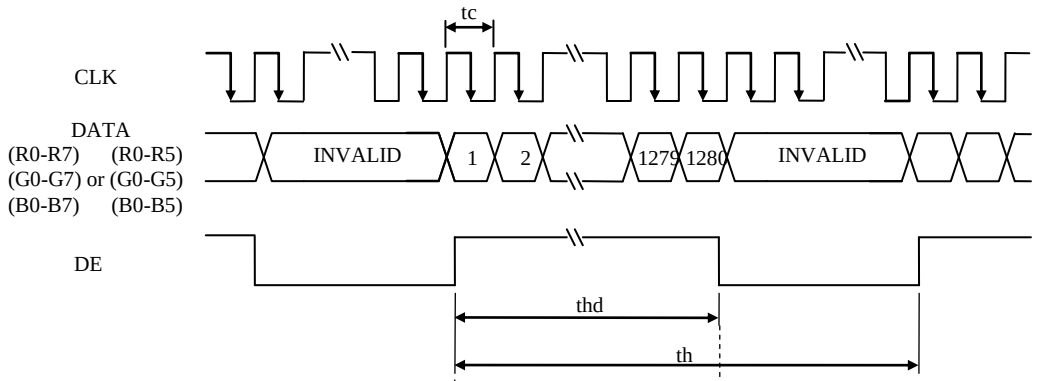


Vertical timing

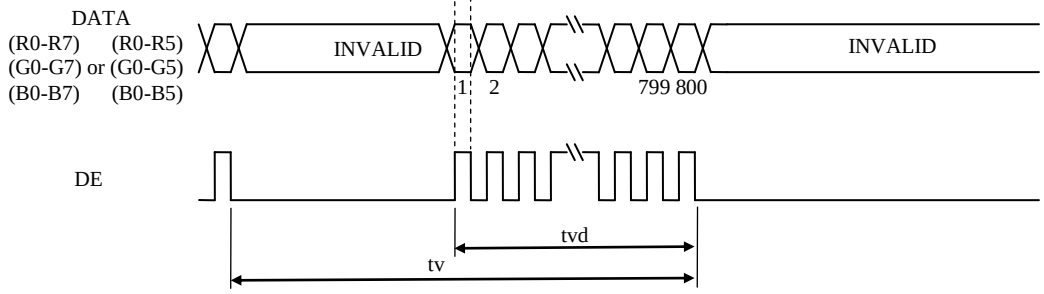

## 4.10 OPTICS

### 4.10.1 Optical characteristics

(Note1, Note2)

| Parameter | | Condition | Symbol | min. | typ. | max. | Unit | Measuring instrument | Remarks | |
|---|---|---|---|---|---|---|---|---|---|---|
| Luminance | | White at center<br>θR= 0°, θL= 0°, θU= 0°, θD= 0° | L | (1300) | (1800) | - | cd/m$^2$ | BM-5A | - | 4 |
| Contrast ratio | | White/Black at center<br>θR= 0°, θL= 0°, θU= 0°, θD= 0° | CR | (500) | (800) | - | - | BM-5A | Note3 | 4 |
| Luminance uniformity | | White<br>θR= 0°, θL= 0°, θU= 0°, θD= 0° | LU | - | (1.25) | (1.4) | - | BM-5A | Note4 | 4 |
| Chromaticity | White | x coordinate | Wx | 0.263 | 0.313 | 0.363 | - | SR-3 | Note5 | |
| | | y coordinate | Wy | 0.279 | 0.329 | 0.379 | - | | | |
| | Red | x coordinate | Rx | - | TBD | - | - | | | |
| | | y coordinate | Ry | - | TBD | - | - | | | |
| | Green | x coordinate | Gx | - | TBD | - | - | | | |
| | | y coordinate | Gy | - | TBD | - | - | | | |
| | Blue | x coordinate | Bx | - | TBD | - | - | | | |
| | | y coordinate | By | - | TBD | - | - | | | |
| Color gamut | | θR= 0°, θL= 0°, θU= 0°, θD= 0°<br>at center, against NTSC color space | C | 35 | 40 | - | % | | | 4 |
| Response time | | White to Black | Ton | - | 3 | 5 | ms | BM-5A<br>-10000 | Note6<br>Note7 | 4 |
| | | Black to White | Toff | - | 12 | 16 | ms | | | |
| Viewing angle | Right | θU= 0°, θD= 0°, CR≥ 10 | θR | 70 | 80 | - | ° | EZ<br>Contrast | Note8 | |
| | Left | θU= 0°, θD= 0°, CR≥ 10 | θL | 70 | 80 | - | ° | | | 4 |
| | Up | θR= 0°, θL= 0°, CR≥ 10 | θU | 70 | 80 | - | ° | | | |
| | Down | θR= 0°, θL= 0°, CR≥ 10 | θD | 70 | 80 | - | ° | | | |

Note1: These are initial characteristics.
Note2: Measurement conditions are as follows.
Ta= 25°C, VCC= 3.3V, IL= (110)mA/One circuit, Display mode: WXGA,
Horizontal cycle= 1/49.306kHz, Vertical cycle= 1/59.92Hz,
DPS= Low or Open: Normal scan

Optical characteristics are measured at luminance saturation 20minutes after the product works in the dark room. Also measurement methods are as follows.

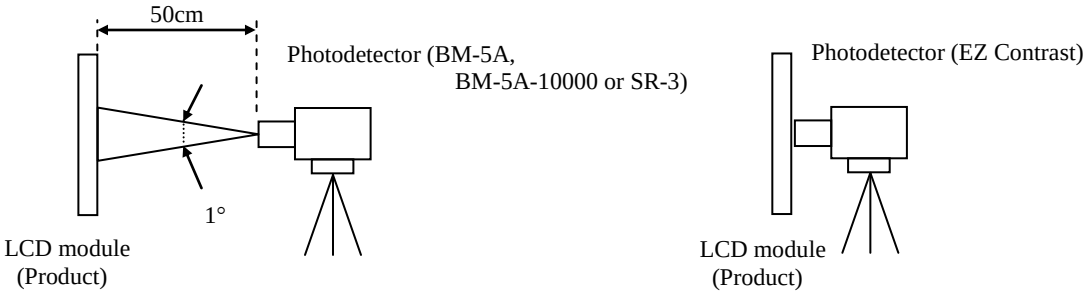


Note3: See "**4.10.2 Definition of contrast ratio**".
Note4: See "**4.10.3 Definition of luminance uniformity**".
Note5: These coordinates are found on CIE 1931 chromaticity diagram.
Note6: Product surface temperature: TopF= 40 °C 4
Note7: See "**4.10.4 Definition of response times**".
Note8: See "**4.10.5 Definition of viewing angles**".

4.10.2 Definition of contrast ratio

The contrast ratio is calculated by using the following formula.

$$\text{Contrast ratio (CR)} = \frac{\text{Luminance of white screen}}{\text{Luminance of black screen}}$$

4.10.3 Definition of luminance uniformity

The luminance uniformity is calculated by using following formula.

$$\text{Luminance uniformity (LU)} = \frac{\text{Maximum luminance from ① to ⑤}}{\text{Minimum luminance from ① to ⑤}}$$

The luminance is measured at near the 5 points shown below.

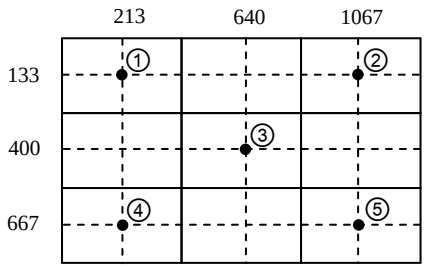


4.10.4 Definition of response times

Response time is measured at the time when the luminance changes from "white" to "black", or "black" to "white" on the same screen point, by photo-detector. Ton is the time when the luminance changes from 90% up to 10%. Also Toff is the time when the luminance changes from 10% down to 90% (See the following diagram.).

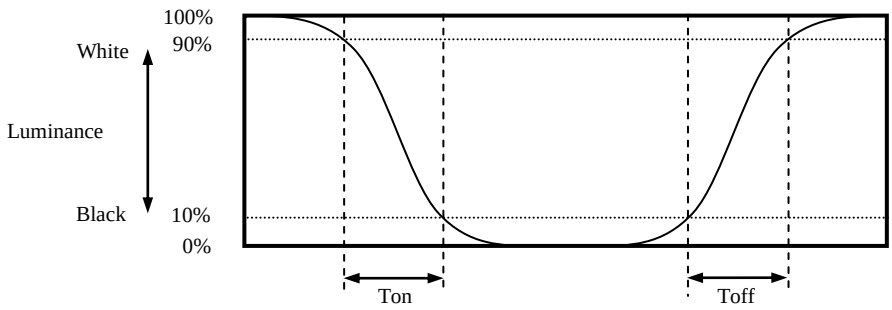


4.10.5 Definition of viewing angles

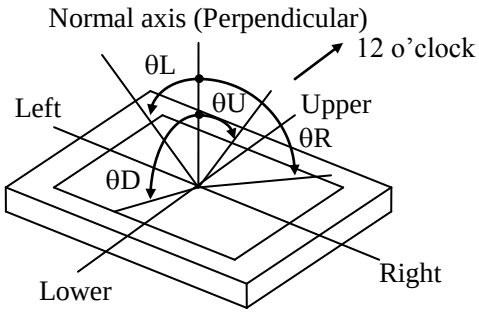

## 5. ESTIMATED LUMINANCE LIFETIME

The luminance lifetime is the time from initial luminance to half-luminance.

**This lifetime is the estimated value, and is not guarantee value.**

| Condition | | Estimated luminance lifetime (Life time expectancy) Note1, Note2, Note3 | Unit |
|---|---|---|---|
| LED elementary substance | 25°C (Ambient temperature of the product) Continuous operation, IL= (110)mA/One circuit | 60,000 | h |
| | 70°C (Ambient temperature of the product) Continuous operation, IL= (110)mA/One circuit | 50,000 | h |

4

Note1: Life time expectancy is mean time to half-luminance.
Note2: Estimated luminance lifetime is not the value for LCD module but the value for LED elementary substance.
Note3: By ambient temperature, the lifetime changes particularly. Especially in case the product works under high temperature environment, the lifetime becomes short.

## 6. RELIABILITY TESTS

| Test item | Condition | Judgment Note1 |
|---|---|---|
| High temperature and humidity (Operation) | ① 60 ± 2°C, RH= 90%, 240hours<br>② Display data is black. | No display malfunctions |
| High temperature (Operation) | ① 70 ± 3°C ,240hours<br>② Display data is black. | |
| Heat cycle (Operation) | ① -20 ± 3°C…1hour<br>70 ± 3°C…1hour<br>② 50cycles, 4 hours/cycle<br>③ Display data is black. | |
| Thermal shock (Non operation) | ① -30 ± 3°C…30minutes<br>80 ± 3°C…30minutes<br>② 100cycles, 1hour/cycle<br>③ Temperature transition time is within 5 minutes. | |
| ESD (Operation) | ① 150pF, 150Ω, ±10kV<br>② 9 places on a panel surface Note2<br>③ 10 times each places at 1 sec interval | |
| Dust (Operation) | ① Sample dust: No. 15 (by JIS-Z8901)<br>② 15 seconds stir<br>③ 8 times repeat at 1 hour interval | |
| Vibration (Non operation) | ① 5 to 100Hz, 19.6m/s$^2$<br>② 1 minute/cycle<br>③ X, Y, Z directions<br>④ 120 times each directions | No display malfunctions<br>No physical damages |
| Mechanical shock (Non operation) | ① 539m/ s$^2$, 11ms<br>② ±X, ±Y, ±Z directions<br>③ 5 times each directions | |

Note1: Display and appearance are checked under environmental conditions equivalent to the inspection conditions of defect criteria.
Note2: See the following figure for discharge points.

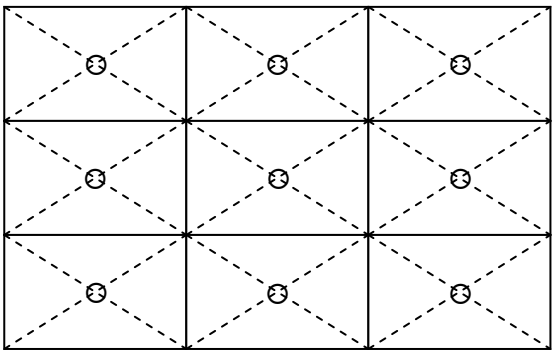

## 7. PRECAUTIONS

### 7.1 MEANING OF CAUTION SIGNS

The following caution signs have very important meaning. **Be sure to read "7.2 CAUTIONS" and "7.3 ATTENTIONS"!**

| | |
|---|---|
| ⚠ | This sign has the meaning that a customer will be injured or the product will sustain damage if the customer practices wrong operations. |
| ✋ | This sign has the meaning that a customer will be injured if the customer practices wrong operations. |

### 7.2 CAUTIONS

✋

**∗ Do not shock and press the LCD panel and the backlight! There is a danger of breaking, because they are made of glass. (Shock: Equal to or no greater than 539m/s$^2$ and equal to or no greater than 11ms, Pressure: Equal to or no greater than 19.6 N (ϕ16mm jig))**

### 7.3 ATTENTIONS ⚠

#### 7.3.1 Handling of the product

① Take hold of both ends without touching the circuit board when the product (LCD module) is picked up from inner packing box to avoid broken down or misadjustment, because of stress to mounting parts on the circuit board.
② When the product is put on the table temporarily, display surface must be placed downward.
③ When handling the product, take the measures of electrostatic discharge with such as earth band, ionic shower and so on, because the product may be damaged by electrostatic.
④ The torque for product mounting screws must never exceed 0.230N·m. Higher torque might result in distortion of the bezel. And the length of product mounting screws must be ≤ 2.5mm.
⑤ The product must be installed using mounting holes without undue stress such as bends or twist (See outline drawings). And do not add undue stress to any portion (such as bezel flat area). Bends or twist described above and undue stress to any portion may cause display mura.
⑥ Do not press or rub on the sensitive product surface. When cleaning the product surface, wipe it with a soft dry cloth.
⑦ Do not push or pull the interface connectors while the product is working.
⑧ When handling the product, use of an original protection sheet on the product surface (polarizer) is recommended for protection of product surface. Adhesive type protection sheet may change color or characteristics of the polarizer.
⑨ Usually liquid crystals don't leak through the breakage of glasses because of the surface tension of thin layer and the construction of LCD panel. But, if you contact with liquid crystal by any chance, please wash it away with soap and water.

7.3.2 Environment

① Do not operate or store in high temperature, high humidity, dewdrop atmosphere or corrosive gases. Keep the product in packing box with antistatic pouch in room temperature to avoid dusts and sunlight, when storing the product.
② In order to prevent dew condensation occurred by temperature difference, the product packing box must be opened after enough time being left under the environment of an unpacking room. Evaluate the storage time sufficiently because dew condensation is affected by the environmental temperature and humidity. (Recommended leaving time: 6 hours or more with the original packing state after a customer receives the package)
③ Do not operate in high magnetic field. If not, circuit boards may be broken.
④ This product is not designed as radiation hardened.

7.3.3 Characteristics

**The following items are neither defects nor failures.**

① Characteristics of the LCD (such as response time, luminance, color uniformity and so on) may be changed depending on ambient temperature. If the product is stored under condition of low temperature for a long time, it may cause display mura. In this case, the product should be operated after enough time being left under condition of operating temperature.
② Display mura, flickering, vertical streams or tiny spots may be observed depending on display patterns.
③ Do not display the fixed pattern for a long time because it may cause image sticking. Use a screen saver, if the fixed pattern is displayed on the screen.
④ The display color may be changed depending on viewing angle because of the use of condenser sheet in the backlight.
⑤ Optical characteristics may be changed depending on input signal timings.

7.3.4 Others

① All VCC and GND terminals should be used without any non-connected lines.
② Do not disassemble a product or adjust variable resistors.
③ See "REPLACEMENT MANUAL FOR LAMP HOLDER SET", when replacing lamp holder set.
④ Pack the product with the original shipping package, in order to avoid any damages during transportation, when returning the product to NLT.

**8. OUTLINE DRAWINGS**

8.1 FRONT VIEW

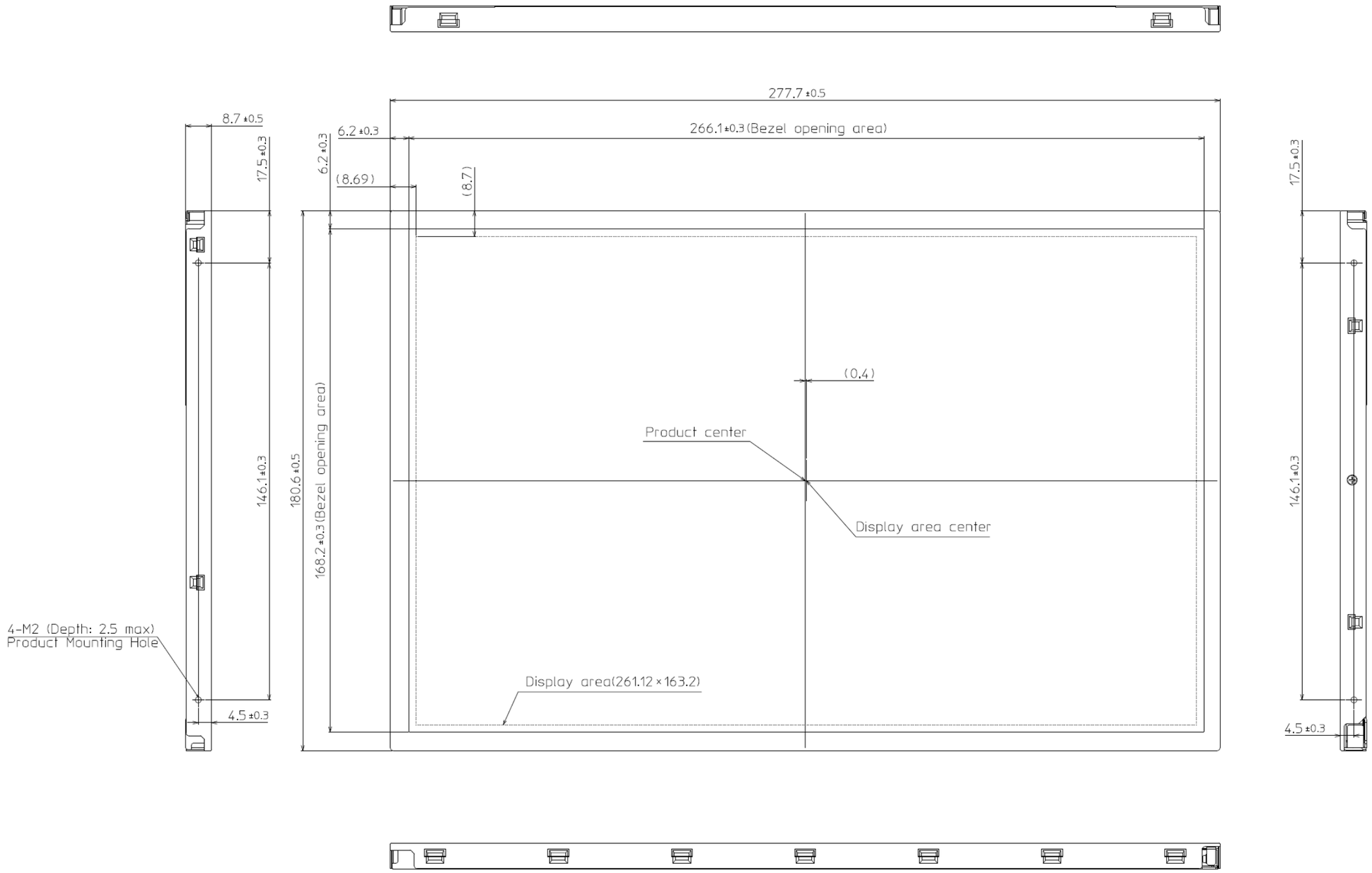


Note1: The values in parentheses are for reference.
Note2: The torque for product mounting screws must never exceed 0.230N·m. And the length of product mounting screws must be ≤ 2.5mm.

Unit: mm

8.2 REAR VIEW

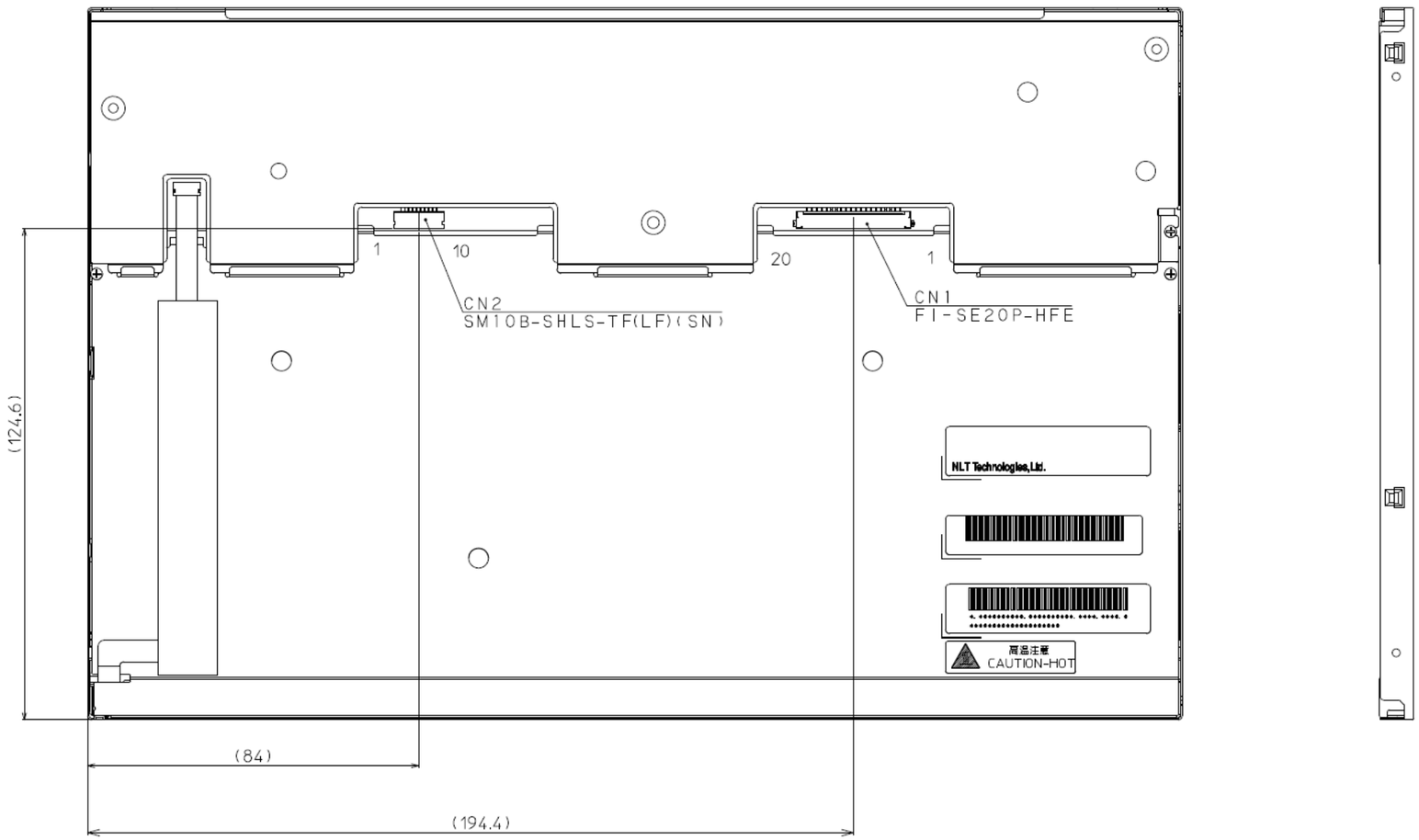


4

Note1: The values in parentheses are for reference.
Note2: The torque for product mounting screws must never exceed 0.230N·m. And the length of product mounting screws must be ≤ 2.5mm.

Unit: mm

## REVISION HISTORY

***The inside of latest specifications is revised to the clerical error and the major improvement of previous edition. Only a changed part such as functions, characteristic value and so on that may affect a design of customers, are described especially below.***

| Edition | Document number | Prepared date | Revision contents and signature |
|---|---|---|---|
| 1st edition | DOD-PP-1678 | June 7, 2013 | **Revision contents**<br><br>New issue<br><br>**Writer**<br>*Approved by* R. KAWASHIMA *Checked by* ——— *Prepared by* A. KUMANO |
| 2nd edition | DOD-PP-1708 | July 19, 2013 | **Revision contents**<br><br>CORRECTION OF DESCRIPTIVE CONTENTS<br>P5 General specifications<br>• Signal system<br>• Receiver: TBD → THC63LVDF84B, THine Electronics Inc. or equivalent<br>P6,7 Block diagram<br>• GND- FG: 47kΩ → 50kΩ (change)<br>• Note3 (revised)<br>P5 General specifications, P8 Mechanical specifications<br>• Weight: TBD g (typ.) → (490) g (typ.)<br>P11 LCD panel signal processing board<br>• Note3 (addition)<br>P12 LCD panel signal processing board<br>• Pin No.18- MSL<br>- Input data signal: 8bit- MAP A, Input data signal: 6bit: Low → Low or Open<br>P13 Positions of plug and socket<br>• Figure (addition)<br>P14-16 Connection between receiver and transmitter for LVDS<br>• (1) Input data signal: 8bit, MAP A, (2) 8bit, MAP B and (3) Input data signal: 6bit<br>• TBD →THC63LVDF84B<br>P27 Estimated luminance lifetime<br>• Condition: IL= (110)50mA → IL= (110)mA (correction)<br>P28 Reliability tests<br>• Vibration: ④ 30 times … → 120 times … (change)<br>P29 Precautions<br>• Attentions<br>• Handling of the product<br>: ④ The torque … TBDN·m. Higher … bezel. And … ≤ TBDmm.<br>→ The torque … 0.23N·m. Higher … bezel. And … ≤ 2.5mm.<br>P31,32 Outline drawings<br>• Front view and Rear view<br>• Figure (addition)<br>• Note1 and Note2 (addition)<br><br>**Writer**<br>*Approved by* R. KAWASHIMA *Checked by* ——— *Prepared by* A. KUMANO |
| 3rd edition | DOD-PP-1761 | Sep. 27, 2013 | **Revision contents**<br><br>PRODUCT CHANGE<br>P7 Block diagram<br>• Note3: Backlight in detail (change) |

## REVISION HISTORY

| Edition | Document number | Prepared date | Revision contents and signature |
|---|---|---|---|
| 3rd edition | DOD-PP-1761 | Sep. 27, 2013 | **Revision contents**<br><br>CORRECTION OF DESCRIPTIVE CONTENTS<br>P30 Attentions - Others<br>• ④ … for repairing and so on (elimination)<br><br>**Writer**<br>*Approved by* R. KAWASHIMA *Checked by* ——— *Prepared by* E. YOSHIMURA |
| 4th edition | DOD-PP-1852 | Feb. 21, 2014 | **Revision contents**<br><br>P5 GENERAL SPECIFICATIONS<br>• Weight: (490) g (typ.) → (460) g (typ.)<br>• Response time: (18) ms (typ.) → 15 ms (typ.)<br>• Luminance: 1,500 cd/m$^2$ (typ.) → (1,800) cd/m$^2$ (typ.)<br>• Backlight- Lamp holder set: Type No. TBD → 121LHS202<br>• Power consumption: TBD W (typ.) → (17.0) W (typ.)<br>P8 DETAILED SPECIFICATIONS<br>• Mechanical specifications<br>• Weight: (490), TBD (typ., max.) g → (460), (490) (typ., max.) g<br>• Absolute maximum ratings<br>• Backlight- Forward current: TBD mA → 130 mA<br>P9 Electrical characteristics<br>• LCD panel signal processing board<br>• Power supply current: TBD (typ., max.) mA → (490), (820) (typ., max.) mA<br>P10 Fuse<br>• VCC: TBD → specified<br>P11 Power supply voltage sequence<br>• LCD panel signal processing board<br>• VCC: TBD → specified<br>: 0.1VCC (addition)<br>• Display signals, Function signals: TBD → specified<br>• LED driver (Title is changed)<br>P25 Optics<br>• Optical characteristics<br>• Luminance: TBD, 1500 (min., typ.) cd/m$^2$ → (1300), (1800) (min., typ.) cd/m$^2$<br>• Contrast ratio: TBD (min.) → (500) (min.)<br>• Luminance uniformity: TBD (max.) → (1.4) (max)<br>• Color gamut: TBD (min.) % → 35 (min.) %<br>• Response time- Ton: (3), TBD (typ., max.) ms → 3, 5 (typ., max.) ms<br>- Toff: (15), TBD (typ., max.) ms → 12, 16 (typ., max.) ms<br>• Viewing angle- Right, Left, Up, Down: TBD (min.) ° → 70 (min.) °<br>• Note6: TopF= TBD °C → TopF= 40 °C<br>P27 ESTIMATED LUMINANCE LIFETIME<br>• LED elementary substance: 70°C, 50,000h (addition)<br>P32 OUTLINE DRAWINGS<br>• Rear view: Labels were added.<br><br>**Signature of writer**<br>*Approved by* R. Kawashima *Checked by* ——— *Prepared by* A. Kumano<br>R. KAWASHIMA A. KUMANO |